DOLPHIN LR 1560/2200 A

Liquid ring vacuum pumps

Discover all advantages of the product series DOLPHIN LR

Robust

Proven technology, reliable operation, extremely high vapor and particle tolerance, specially designed for challenging environments like mining, power plants, sugar production, pulp and paper industry, steel production etc.

High performance

High-capacity, high pumping speeds

Flexible

Modular design, choice of cast iron (EN-GJL-200) housing with ductile cast iron impeller or all 304 grade, or 316L grade corrosion-free stainless steel material, operating fluids other than water possible, operation as compressor possible

Accessories

- Motorized pumpsets, with gearbox or V-belt drive system, mounted on sturdy steel base frames
- Partial or total recirculation systems
- Cavitation protection
- Gas ejector
- Non-return valves
- Vacuum relief valves

© Busch Vacuum Solutions

DOLPHIN LR 1560/2200 A

Liquid ring vacuum pumps

Dimensional drawing

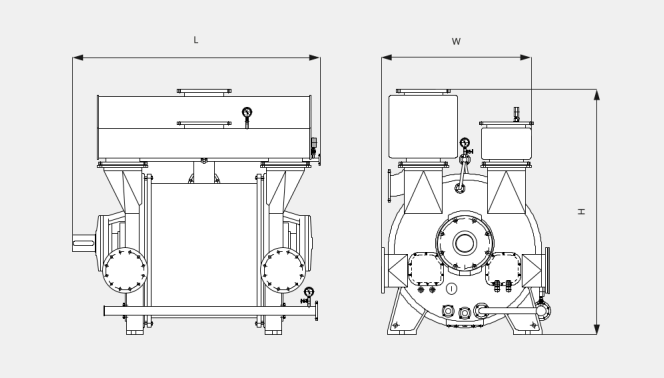

Pumping speed

Dry air at 20 °C. Tolerance: - 5%, in accordance with HEI and Pneurop 6612

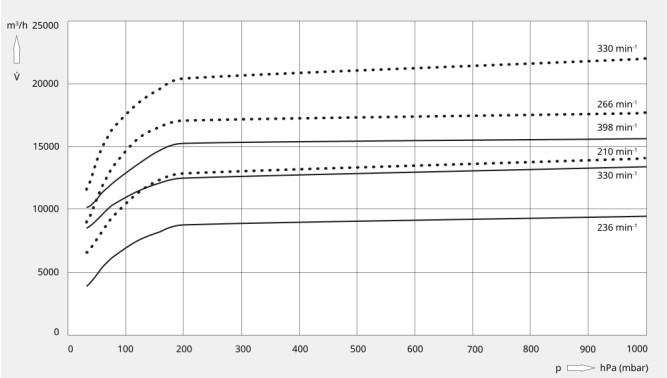

The following technical values refer to ISO 50 Hz

	DOLPHIN LR 1560 A	DOLPHIN LR 2200 A
Nominal pumping speed	9500 m³/h	14100 m³/h
Ultimate pressure	33 hPa (mbar)	33 hPa (mbar)
Nominal motor rating	220 – 450 kW	355#600 kW
Nominal motor speed	236 – 398 min^{-1}	210#330 min^{-1}
Noise level (ISO 2151)	< 85 dB(A)	< 85 dB(A)
Weight approx.	8340 kg	12000 kg
Dimensions (L x W x H)	2512 x 1785 x 2560 mm	2891 x 2065 x 2965 mm
Gas inlet	DN 400 PN 10	DN 500 PN 10
Gas outlet	DN 400 PN 10	DN 500 PN 10

The following technical values refer to ISO 60 Hz

	DOLPHIN LR 1560 A	DOLPHIN LR 2200 A
Nominal pumping speed	15600 m³/h	22000 m³/h
Ultimate pressure	33 hPa (mbar)	33 hPa (mbar)
Nominal motor rating	220 – 450 kW	355#600 kW
Nominal motor speed	236 – 398 min^{-1}	210#330 min^{-1}
Noise level (ISO 2151)	< 85 dB(A)	< 85 dB(A)

DOLPHIN LR 1560/2200 A

Liquid ring vacuum pumps

VACUUM SOLUTIONS

	DOLPHIN LR 1560 A	DOLPHIN LR 2200 A
Weight approx.	8340 kg	12000 kg
Dimensions (L x W x H)	2512 x 1785 x 2560 mm	2891 x 2065 x 2965 mm
Gas inlet	DN 400 PN 10	DN 500 PN 10
Gas outlet	DN 400 PN 10	DN 500 PN 10

DO YOU WANT TO KNOW MORE

Please contact us!
info@busch.co.za or +27 (0)11 856 0650

CONTACT FORM

CALL US NOW