R5 KD 0025 A

Oil-lubricated rotary vane vacuum pump

Discover all advantages of
the product series R5 KD

Compact

Direct-drive construction, reduced height and weight, specially designed for table top packaging machines

High performance

Fast pump-down times, high vapor tolerance, excellent condensation protection, optimum temperature management

Easy servicing

Fast service routine, long service intervals, smooth surface design for easy cleaning

© Busch Vacuum Solutions

R5 KD 0025 A

Oil-lubricated rotary vane vacuum pump

Dimensional drawing

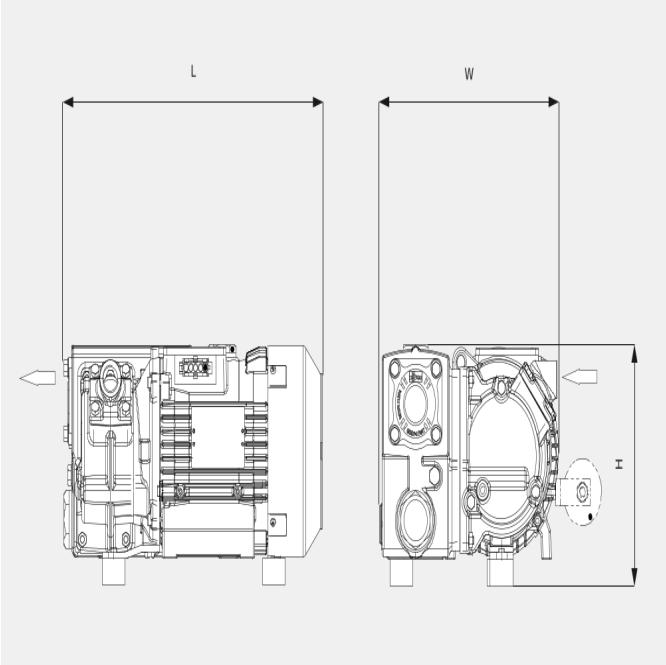

Pumping speed

Air at 20 °C. Tolerance: ± 10%

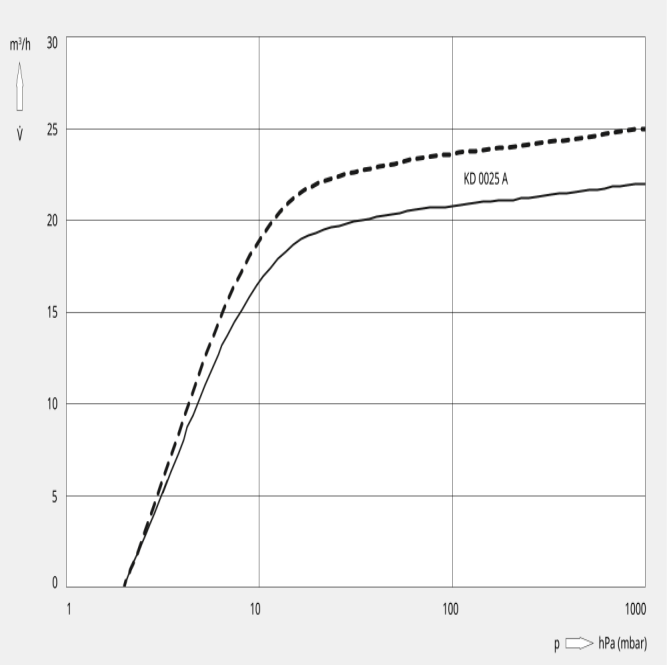

The following technical values refer to ISO 50 Hz

	R5 KD 0025 A short separator	KD 0025 A long separator
Nominal pumping speed	22 m³/h	22 m³/h
Ultimate pressure	2.0 hPa (mbar)	2.0 hPa (mbar)
Nominal motor rating	0.75 kW	0.75 kW
Nominal motor speed	3000 min^{-1}	3000 min^{-1}
Sound pressure level (ISO 2151)	62 dB(A)	64 dB(A)
Oil capacity	0.3 l	0.45 l
Weight approx.	21 kg	21 kg
Dimensions (L x W x H)	339 x 235 x 180 mm	338 x 232 x 187 mm
Gas outlet	G ½"	G ½"

© Busch Vacuum Solutions

R5 KD 0025 A

Oil-lubricated rotary vane vacuum pump

	R5 KD 0025 A short separator	KD 0025 A long separator
Gas inlet	G ½"	G ½"

The following technical values refer to ISO 60 Hz

	R5 KD 0025 A short separator	KD 0025 A long separator
Nominal pumping speed	25 m^3/h	25 m^3/h
Ultimate pressure	2.0 hPa (mbar)	2.0 hPa (mbar)
Nominal motor rating	0.9 kW	0.9 kW
Nominal motor speed	3600 min^{-1}	3600 min^{-1}
Sound pressure level (ISO 2151)	67 dB(A)	68 dB(A)
Oil capacity	0.3 l	0.45 l
Weight approx.	21 kg	21 kg
Dimensions (L x W x H)	339 x 235 x 180 mm	338 x 232 x 187 mm
Gas outlet	G ½"	G ½"
Gas inlet	G ½"	G ½"

DO YOU WANT TO KNOW MORE

Please contact us!
info@buschusa.com or +1-800-USA-PUMP (872-7867)

CONTACT FORM

CALL US NOW