MINK MV 0040–0080 D Synchro

Dry claw vacuum pumps

Discover all advantages of
the product series MINK MV

Quiet

Low noise level due to a state-of-the-art acoustic design, significantly reduced pulsation, can be installed at workstations

Efficient

Latest claw vacuum technology, intelligent variable speed drive with PID controller, low energy consumption, minimized operating costs

Compact

Small footprint

Accessories

- Parameter configuration kit for alteration of control settings by computer, including software
- Fieldbus modules
- Pressure transmitter for pressure-regulated vacuum pump operation
- Inlet filter
- Condensate drain valve (Aqua version)
- Manual control unit for easy vacuum pump control
- ATEX light version available
- Gas-leakage-optimized version available

© Busch Vacuum Solutions

MINK MV 0040–0080 D Synchro

Dry claw vacuum pumps

Dimensional drawing

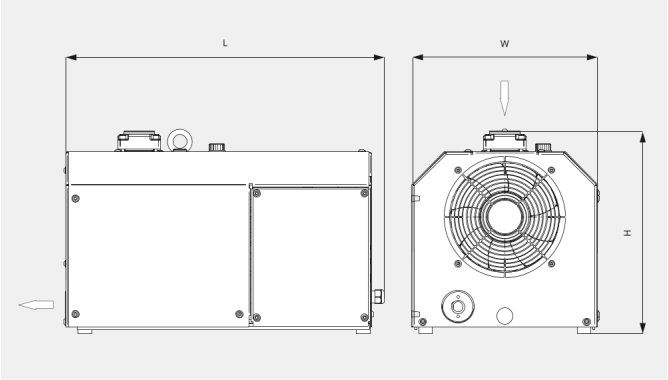

Pumping speed

Air at 20 °C. Tolerance: ± 10%

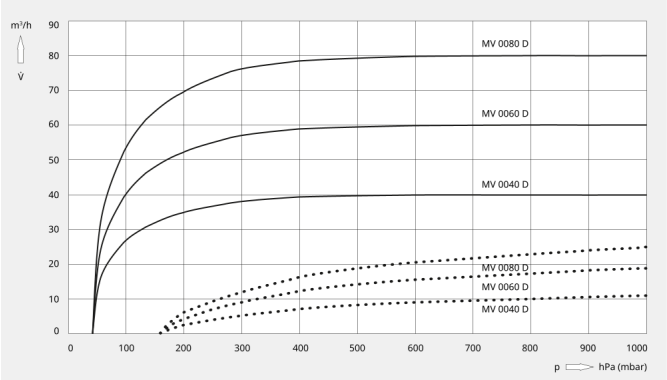

The following technical values refer to ISO 50 Hz

	MINK MV 0040 D	MINK MV 0060 D	MINK MV 0080 D
Nominal pumping speed	40 m³/h	60 m³/h	80 m³/h
Ultimate pressure	40 hPa (mbar)	40 hPa (mbar)	40 hPa (mbar)
Power consumption (motor and fan)	1.3 kW	1.7 kW	2.1 kW
Nominal motor speed	1200 – 4200 min^{-1}	1200 – 4200 min^{-1}	1200 – 4800 min^{-1}
Noise level (ISO 2151)	62 dB(A)	68 dB(A)	71 dB(A)
Oil capacity	0.6 l	0.6 l	0.6 l
Weight approx.	80 kg	85 kg	90 kg
Dimensions (L x W x H)	585 x 345 x 370 mm	610 x 345 x 370 mm	610 x 345 x 370 mm
Gas inlet	G 1¼"	G 1¼"	G 1¼"
Gas outlet	G ¾"	G ¾"	G ¾"

The following technical values refer to ISO 60 Hz

	MINK MV 0040 D	MINK MV 0060 D	MINK MV 0080 D
Nominal pumping speed	40 m³/h	60 m³/h	80 m³/h
Ultimate pressure	40 hPa (mbar)	40 hPa (mbar)	40 hPa (mbar)
Power consumption (motor and fan)	1.3 kW	1.7 kW	2.1 kW
Nominal motor speed	1200 – 4200 min^{-1}	1200 – 4200 min^{-1}	1200 – 4800 min^{-1}

© Busch Vacuum Solutions

MINK MV 0040–0080 D Synchro

Dry claw vacuum pumps

	MINK MV 0040 D	MINK MV 0060 D	MINK MV 0080 D
Noise level (ISO 2151)	62 dB(A)	68 dB(A)	71 dB(A)
Oil capacity	0.6 l	0.6 l	0.6 l
Weight approx.	80 kg	85 kg	90 kg
Dimensions (L x W x H)	585 x 345 x 370 mm	610 x 345 x 370 mm	610 x 345 x 370 mm
Gas inlet	G 1¼"	G 1¼"	G 1¼"
Gas outlet	G ¾"	G ¾"	G ¾"

DO YOU WANT TO KNOW MORE

Please contact us!
sales@busch.co.nz or +64 (0)800 428 724

CONTACT FORM

CALL US NOW