R5 RE 0040/0063 C

Oil-lubricated rotary vane vacuum pumps

VACUUM SOLUTIONS

Explosion-proof

ATEX-certified to directive 2014/34/EU: II 1/2G Ex h IIB3 T4 Ga/Gb, specially designed to extract explosion endangered gas/air and vapor/air mixtures, suitable for the extraction of almost all substances in the IIB3 explosion group as well as petrol vapor

Reliable

Robust construction, highly durable fiber-reinforced epoxy resin vanes, proven rotary vane technology, long service life

Flexible

Various design options available, easy adaption to individual customer requirements and processes, resistance thermometer with transmitter as standard

Accessories, spare parts and options

- Gas-ballast valve
- Oil level switch
- Anti-corrosion coating on the oil separator
- T4 motor and transmitter (temperature class T4 outside the vacuum pump)

© Busch Vacuum Solutions

R5 RE 0040/0063 C

Oil-lubricated rotary vane vacuum pumps

VACUUM SOLUTIONS

Dimensional drawing

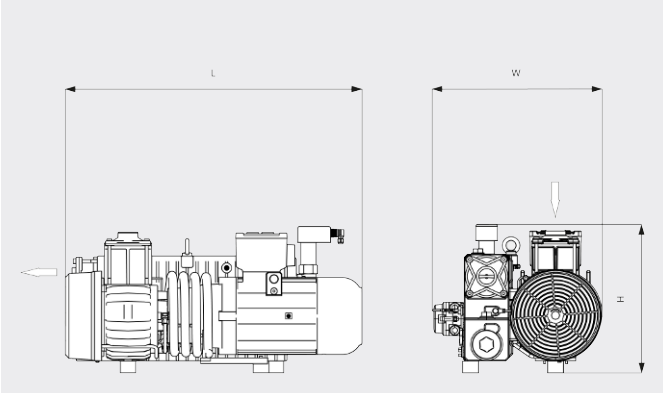

Pumping speed

Air at 20°C. Tolerance: ± 10% ___ 50 Hz ..... 60 Hz

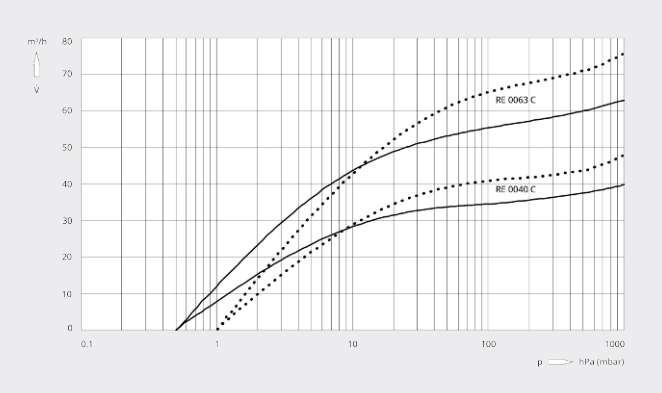

	R5 RE 0040 C	R5 RE 0063 C
Nominal pumping speed	40 / 48 m^3/h (50 / 60 Hz)	63 / 76 m^3/h (50 / 60 Hz)
Ultimate pressure	0.5 / 1.0 hPa (mbar) (50 / 60 Hz)	0.5 / 1.0 hPa (mbar) (50 / 60 Hz)
Nominal motor rating	1.5 / 2.2 kW (50 / 60 Hz)	2.2 / 3.0 kW (50 / 60 Hz)
Nominal motor speed	1500 / 1800 min^{-1} (50 / 60 Hz)	1500 / 1800 min^{-1} (50 / 60 Hz)
Noise level (ISO 2151)	63 / 66 dB(A) (50 / 60 Hz)	65 / 68 dB(A) (50 / 60 Hz)
Oil capacity	2 l	2 l
Weight approx.	100 kg	100 kg
Dimensions (L x W x H)	695 x 420 x 372 mm	752 x 420 x 372 mm
Gas inlet / outlet	G 1¼" / G 1¼"	G 1¼" / G 1¼"

DO YOU WANT TO KNOW MORE?

Get in touch with us directly!

CONTACT FORM

© Busch Vacuum Solutions