SAMOS SI 0090–0210 E2

Side channel blowers

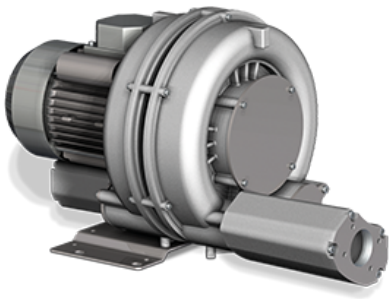

Discover all advantages of
the product series SAMOS SI

Reliable

Robust construction, effective air cooling, long lifetime, nearly maintenance-free, dry and contact-free operating principle, high differential pressures thanks to two compression stages, protection against overheating

Flexible

Vacuum or overpressure operation, horizontal and vertical installation

Quiet

Low noise level, fully enclosed unit, internal silencers

Accessories

- Vacuum relief valves
- Pressure relief valves
- Additional silencers

© Busch Vacuum Solutions

SAMOS SI 0090–0210 E2

Side channel blowers

Dimensional drawing

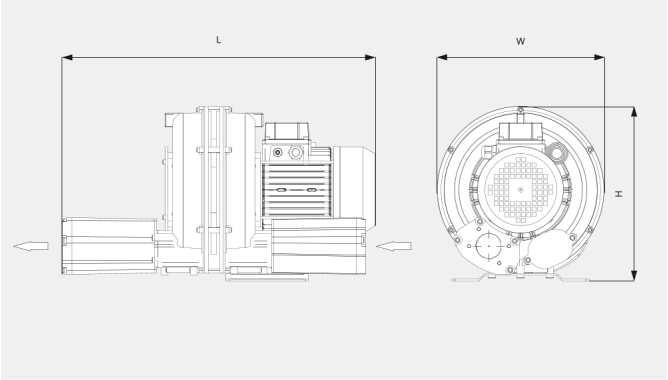

Pumping speed/Volume flow

Air at 20 °C. Tolerance: ± 10%

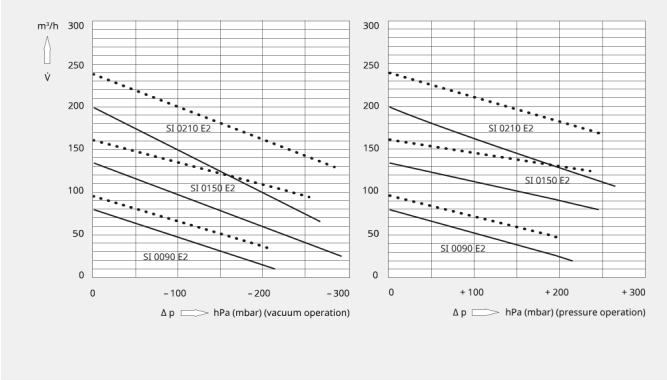

The following technical values refer to ISO 50 Hz

	SAMOS SI 0090 E2	SAMOS SI 0150 E2	SAMOS SI 0210 E2
Technology short name	Side channel	Side channel	Side channel
Nominal pumping speed/volume flow	80 m³/h	135 m³/h	200 m³/h
Max. differential pressure (vacuum version)	-215 hPa (mbar)	-295 hPa (mbar)	-265 hPa (mbar)
Max. differential pressure (overpressure version)	+215 hPa (mbar)	+255 hPa (mbar)	+265 hPa (mbar)
Max. operating power	0.7 kW	1.5 kW	2.2 kW
Nominal motor speed	3000 min^{-1}	3000 min^{-1}	3000 min^{-1}
Noise level (ISO 3744)	64 dB(A)	65 dB(A)	72 dB(A)
Weight approx.	16 kg	25 kg	31 kg
Dimensions (L x W x H)	535 x 245 x 251 mm	543 x 302 x 316 mm	297 x 334 x 341 mm
Gas inlet	G 1¼"	G 1½"	G 1½"
Gas outlet	G 1¼"	G 1½"	G 1½"

The following technical values refer to ISO 60 Hz

	SAMOS SI 0090 E2	SAMOS SI 0150 E2	SAMOS SI 0210 E2
Technology short name	Side channel	Side channel	Side channel
Nominal pumping speed/volume flow	96 m³/h	162 m³/h	240 m³/h

© Busch Vacuum Solutions

SAMOS SI 0090–0210 E2

Side channel blowers

	SAMOS SI 0090 E2	SAMOS SI 0150 E2	SAMOS SI 0210 E2
Max. differential pressure (vacuum version)	-205 hPa (mbar)	-255 hPa (mbar)	-280 hPa (mbar)
Max. differential pressure (overpressure version)	+195 hPa (mbar)	+235 hPa (mbar)	+245 hPa (mbar)
Max. operating power	0.9 kW	1.7 kW	2.5 kW
Nominal motor speed	3600 min^{-1}	3600 min^{-1}	3600 min^{-1}
Noise level (ISO 3744)	68 dB(A)	68 dB(A)	72 dB(A)
Weight approx.	16 kg	25 kg	31 kg
Dimensions (L x W x H)	535 x 245 x 251 mm	543 x 302 x 316 mm	297 x 334 x 341 mm
Gas inlet	G 1¼"	G 1½"	G 1½"
Gas outlet	G 1¼"	G 1½"	G 1½"

DO YOU WANT TO KNOW MORE

Please contact us!
info@busch.ca or +1 800 363 63 60

CONTACT FORM

CALL US NOW