DOLPHIN LA 1157–1807 A

Liquid ring vacuum pumps

Robust

Proven technology, durable single-stage construction

Reliable

Extremely high vapor and particle tolerance

Flexible

Wide range of construction materials, including cast iron (EN-GJL-200), many grades of stainless steel and even titanium, ATEX-certified version available (Cat 1(i)/2(o) IIC T5), different operating fluids possible, operation as compressor possible

Accessories, spare parts and options

- Partial or total recirculation systems
- Liquid separator
- Cavitation protection
- Heat exchanger
- Gas ejector
- Wide selection of motors
- Non-return valves
- Vacuum relief valves

© Busch Vacuum Solutions

DOLPHIN LA 1157–1807 A

Liquid ring vacuum pumps

VACUUM SOLUTIONS

Dimensional drawing

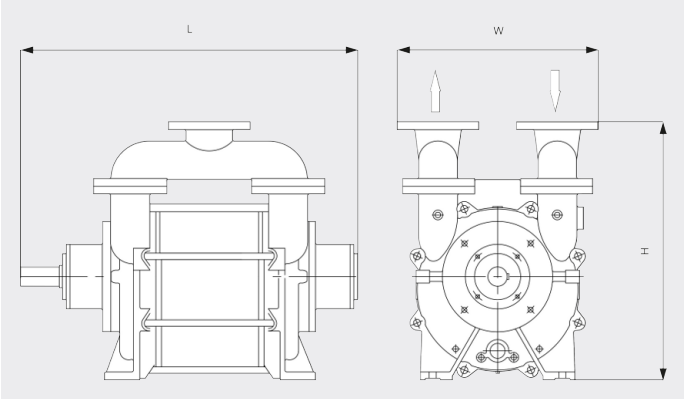

Pumping speed

Air at 20°C. Tolerance: ± 10% ___ 50 Hz ..... 60 Hz

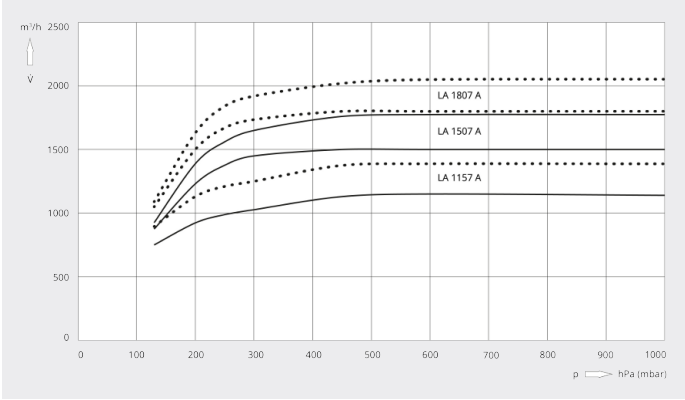

	DOLPHIN LA 1157 A	DOLPHIN LA 1507 A	DOLPHIN LA 1807 A
Nominal pumping speed	1150 / 1380 m³/h	1500 / 1800 m³/h	1800 / 2050 m³/h
Ultimate pressure	130 hPa (mbar)	130 hPa (mbar)	130 hPa (mbar)
Nominal motor rating	30 / 45 kW	45 / 55 kW	50 / 75 kW
Nominal motor speed	980 / 1150 min^{-1}	980 / 1150 min^{-1}	980 / 1150 min^{-1}
Noise level (ISO 2151)	77 dB(A)	77 dB(A)	77 dB(A)
Weight approx.	575 kg	638 kg	701 kg
Dimensions (L x W x H)	(1046 – 1231) x 480 x 800 mm	(1146 – 1331) x 480 x 800 mm	(1246 – 1431) x 480 x 800 mm
Gas inlet / outlet	DN 125 PN 10 / DN 125 PN 10	DN 125 PN 10 / DN 125 PN 10	DN 125 PN 10 / DN 125 PN 10

DO YOU WANT TO KNOW MORE?

Get in touch with us directly!
info@busch.ca or **+1 800 363 6360**

CONTACT FORM

CALL NOW

© Busch Vacuum Solutions