VACUUM SOLUTIONS

Part of the BUSCH GROUP

R5 PLUS

Oil-Lubricated Rotary Vane Vacuum Pumps
RA 0840 B PLUS

Instruction Manual



SERVICE
AND SPARE PARTS, INSTRUCTION MANUALS ...
WWW.BUSCHVACUUM.COM/SERVICE-CONTACT
VACUUM APP

CE UK CA

2000280535 | A0_en-US | Original instructions

2026/10/21

Table of Contents

1 Safety 4

2 Product Description 5

2.1 Operating Principle 8

2.2 Intended Use 8

2.3 Standard Features 8

2.3.1 Control Unit and User Interface 8

2.3.2 ECOTORQUE Variable Speed Drive (VSD) 9

2.3.3 Inlet Pressure Sensor 9

2.3.4 Temperature Switch 9

2.4 Optional Accessories 9

2.4.1 Gas-Ballast Valve 9

2.4.2 Inlet Filter 9

2.4.3 Water-Oil Heat Recovery Unit 9

2.4.4 Electro-pneumatic Inlet Valve 9

2.4.5 OTTO IoT Box 10

2.4.6 I/O and Communication Port 10

2.4.7 Main Power Switch / Breaker 14

2.4.8 Industrial Quick Connector 15

3 Transport and Handling 16

3.1 Machine with Cabinet 17

3.2 Machine without Cabinet 18

4 Storage 19

5 Installation 20

5.1 Installation Conditions 20

5.2 Cabinet Panels 22

5.3 Connecting Lines / Pipes 22

5.3.1 Inlet Connection 23

5.3.2 Exhaust Connection 23

5.3.3 Cooling Water Connection (Optional) 24

5.3.4 Electro-Pneumatic Inlet Valve Connection (Optional) 27

5.4 Filling Oil 28

5.5 Fitting the Coupling 29

6 Electrical Connection 30

6.1 PLUS Machine 31

6.2 Main Power Supply Connection 32

6.3 Modbus Control and Ethernet Settings (Optional) 34

7 Commissioning 35

7.1 Description of User Interface Functions 36

7.1.1 Roles and Users 37

7.1.2 Home 38

7.1.3 Operations 41

7.1.4 Maintenance 47

7.1.5 System 48

7.2 Conveying Condensable Vapors 52

8 Maintenance 53

8.1 Maintenance Schedule 54

8.2 Oil Level Inspection 56

8.3 Oil and Oil Filter Change 56

8.4 Exhaust Filter Change 58

8.5 Air Heat Exchanger Cleaning 61
8.6 Machine Cleaning 62
9 Overhaul 63
10 Decommissioning 64
10.1 Dismantling and Disposal 64
11 Spare Parts 65
12 Troubleshooting 66
13 Technical Data 69
14 Oil 70
15 EU Declaration of Conformity 71
16 UK Declaration of Conformity 72

1 Safety

Prior to handling the machine, this instruction manual should be read and understood. If anything needs to be clarified, contact your manufacturer representative.

Read this instruction manual carefully before use and keep for future reference.

This instruction manual remains valid as long as the customer does not change anything on the product.

The machine is intended for industrial use. It must be handled only by technically trained personnel.

Always wear appropriate personal protective equipment in accordance with the local regulations.

The machine has been designed and manufactured in accordance with the state-of-the-art methods. Nevertheless, residual risks may remain, as described in the following chapters and in accordance with the chapter *Intended Use* [➔ 8].

This instruction manual highlights potential hazards where appropriate. Safety notes and warning messages are tagged with one of the keywords DANGER, WARNING, CAUTION, NOTICE and NOTE as follows:



DANGER

... indicates an imminent dangerous situation that will result in death or serious injuries if not prevented.



WARNING

... indicates a potentially dangerous situation that could result in death or serious injuries.



CAUTION

... indicates a potentially dangerous situation that could result in minor injuries.



NOTICE

... indicates a potentially dangerous situation that could result in damage to property.



NOTE

... indicates helpful tips and recommendations, as well as information for efficient and trouble-free operation.

2 Product Description

NOTE

Technical term.

In this instruction manual, we consider that the term ‘machine’ refers to the ‘vacuum pump’.

NOTE

Illustrations.

In this instruction manual, the illustrations may differ from the appearance of the machine.

RA 0840 B PLUS with cabinet

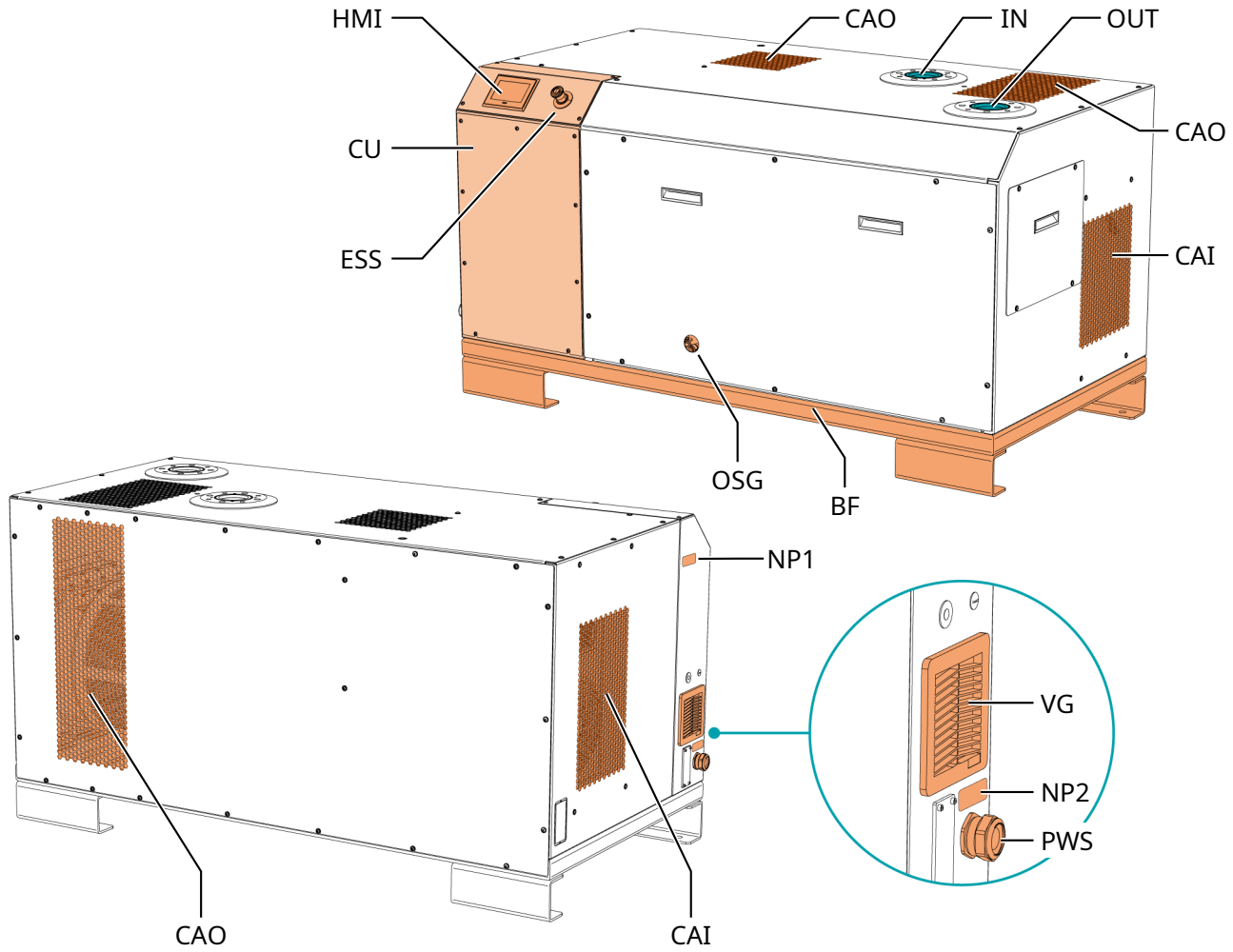

Description			
IN	Inlet connection	OUT	Exhaust connection
BF	Base frame	CAI	Cooling air inlet
CAO	Cooling air outlet	CU	Control unit
ESS	Emergency stop switch	HMI	User interface (Human-Machine Interface)
NP1	Name plate (Machine)	NP2	Name plate (Electrical)
OSG	Oil sight glass	PWS	Power supply (Cable gland)
VG	Ventilation grid (CU)		

RA 0840 B PLUS with cabinet (machine inside)

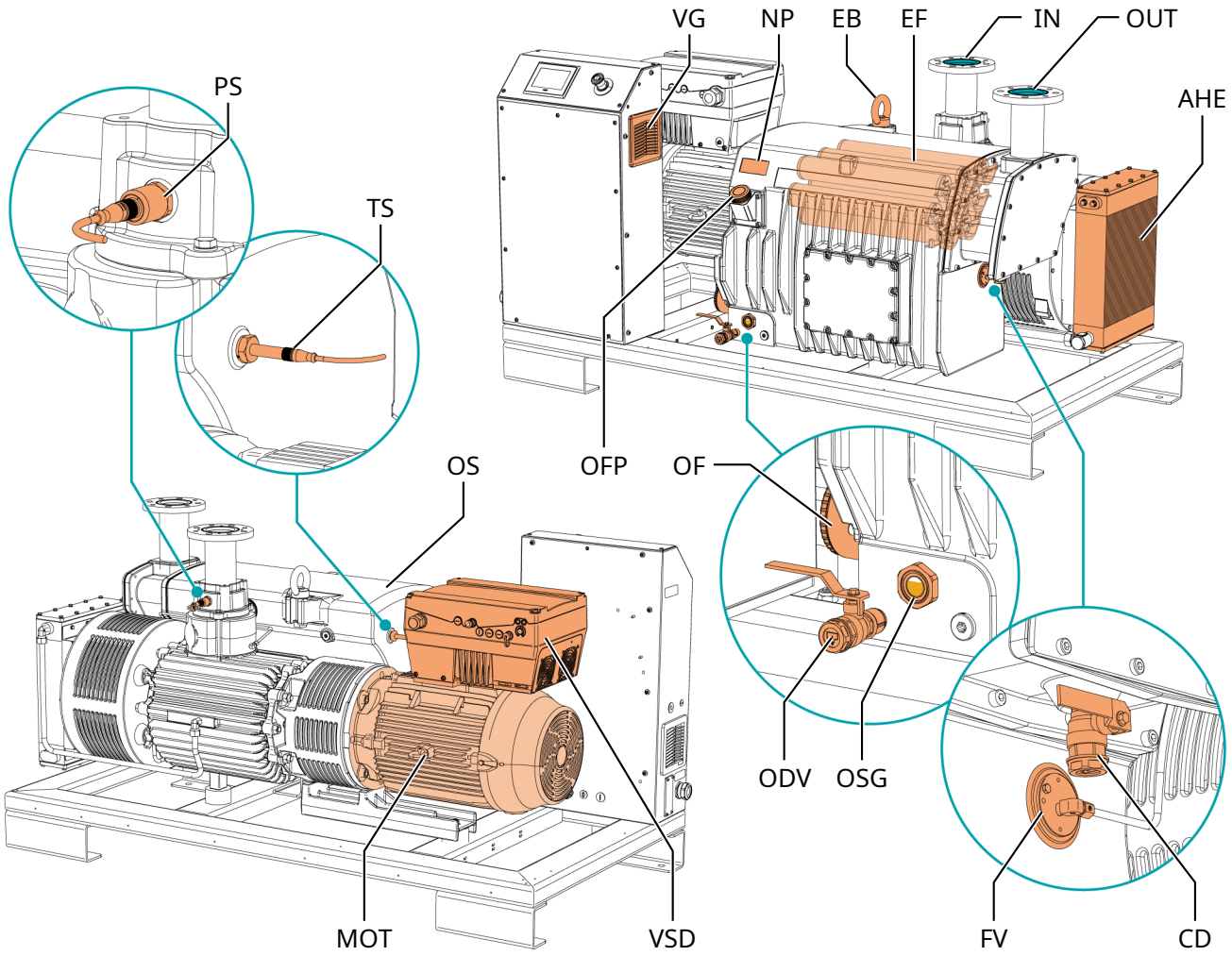

Description			
IN	Inlet connection	OUT	Exhaust connection
AHE	Air-oil heat exchanger	CD	Condensate drain valve
EB	Eye bolt	EF	Exhaust filters
FV	Float valve	MOT	Motor
NP	Name plate	ODV	Oil drain valve
OF	Oil filter	OFP	Oil fill plug
OS	Oil separator	OSG	Oil sight glass
PS	Pressure sensor (Inlet gas pressure)	TS	Temperature switch
VG	Ventilation grid (CU)	VSD	Variable Speed Drive

RA 0840 B PLUS without cabinet

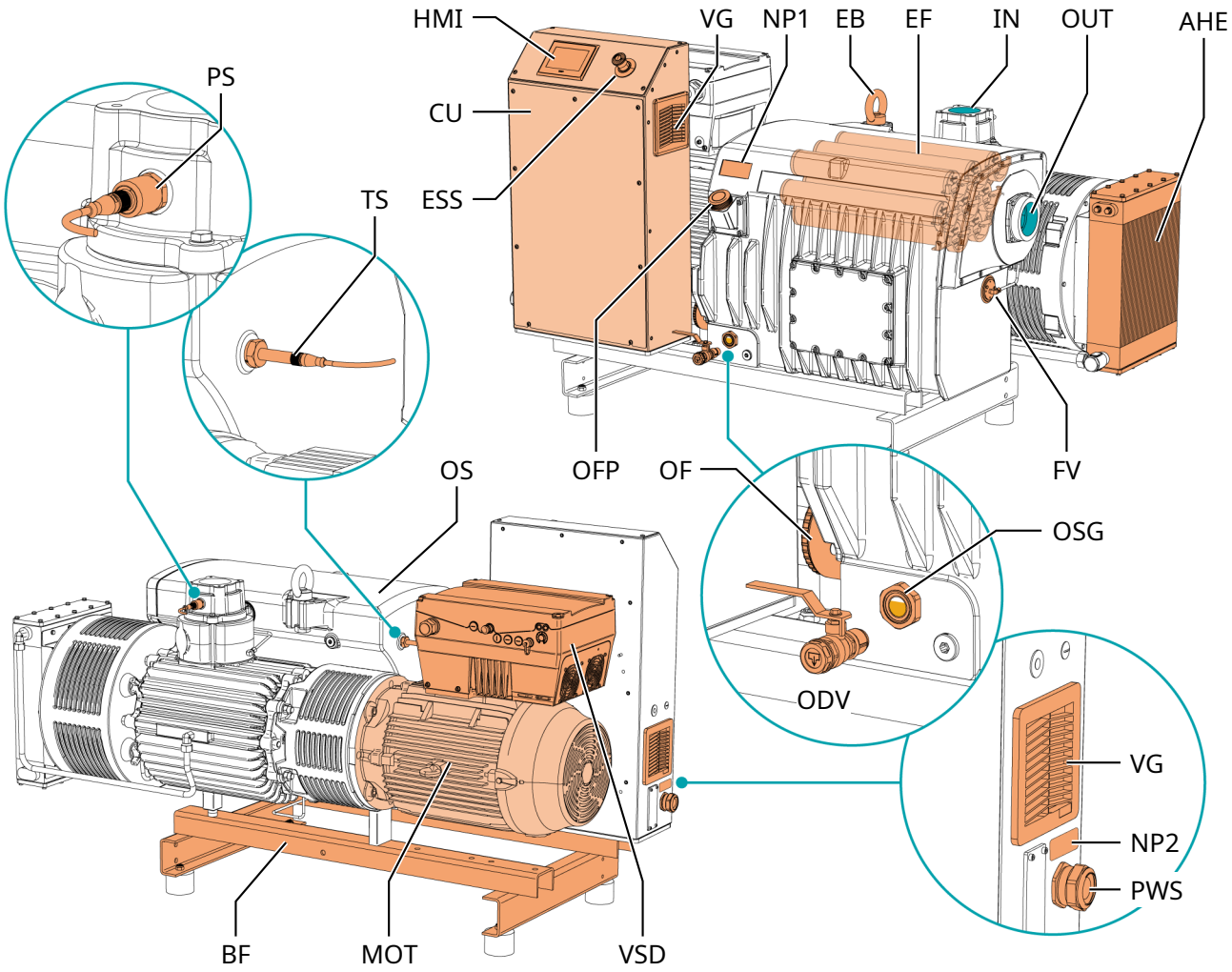

Description			
IN	Inlet connection	OUT	Exhaust connection
AHE	Air-oil heat exchanger	BF	Base frame
CU	Control unit	EB	Eye bolt
EF	Exhaust filters	ESS	Emergency stop switch
FV	Float valve	HMI	User interface (Human-Machine Interface)
MOT	Motor	NP1	Name plate (Machine)
NP2	Name plate (Electrical)	ODV	Oil drain valve
OF	Oil filter	OFP	Oil fill plug
OS	Oil separator	OSG	Oil sight glass
PS	Pressure sensor (Inlet gas pressure)	PWS	Power supply (Cable gland)
TS	Temperature switch	VG	Ventilation grid (CU)
VSD	Variable Speed Drive		

2.1 Operating Principle

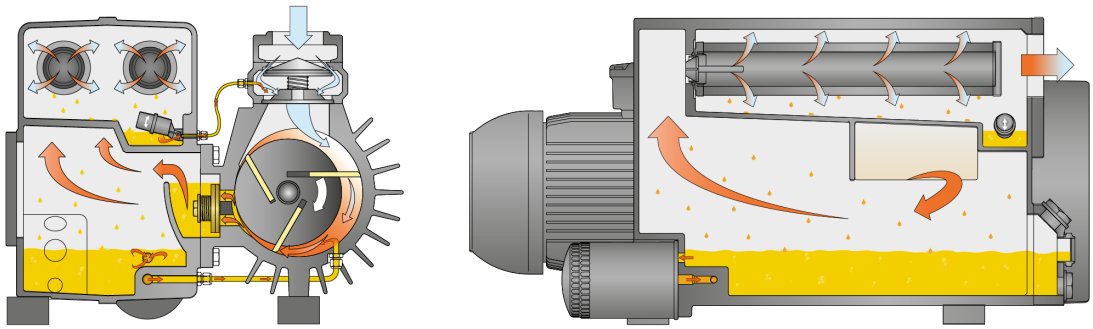

The machine works on the rotary vane principle.

The oil seals the gaps, lubricates the vanes and takes away compression heat.

Exhaust filters separate the oil from the exhaust gas.

The machine is cooled by an air-oil heat exchanger (AHE). Due to the pressure differential, the oil naturally circulates in a closed circuit from the vacuum pump (VP) to the air-oil heat exchanger.

2.2 Intended Use

WARNING

In case of foreseeable misuse outside the intended use of the machine.

Risk of injuries!

Risk of damage to the machine!

Risk of damage to the environment!

- Make sure to follow all instructions described in this manual.

The machine is intended for the suction of air and other dry, non-aggressive, non-toxic, non-ignitable and non-explosive gases.

Conveying of other media leads to an increased thermal and/or mechanical load on the machine and is permissible only after a consultation with the manufacturer.

The machine is intended for indoor placement in a potentially non-explosive environment.

The machine is designed for indoor installations. For outdoor installations, consult your Busch representative for special precautions.

The machine is capable of maintaining ultimate pressure, see *Technical Data* [➔ 69].

The machine is suitable for continuous operation.

Permitted environmental conditions, see *Technical Data* [➔ 69].

2.3 Standard Features

2.3.1 Control Unit and User Interface

The control unit (CU) is an electrical control cabinet equipped with a user interface, also called human-machine interface (HMI). The HMI allows control, monitoring and configuration of the machine via a 5-inch touchscreen. For more information, see *Description of User Interface Functions* [➔ 36].

The control unit must be connected to the mains, see *Electrical Connection* [➔ 30].

2.3.2 ECOTORQUE Variable Speed Drive (VSD)

The machine is equipped with an ECOTORQUE Variable Speed Drive (35-70 Hz) fitted on the motor.

2.3.3 Inlet Pressure Sensor

The inlet pressure sensor monitors the pressure on the inlet of the machine and allows pressure control.

2.3.4 Temperature Switch

The temperature switch monitors the exhaust gas temperature of the machine.

The temperature switch has one switch point:

- Switch point T = 110°C. Trip, the machine stops automatically.

2.4 Optional Accessories

2.4.1 Gas-Ballast Valve

The gas-ballast valve mixes the process gas with a limited quantity of ambient air to counteract the condensation of vapor inside the machine.

The gas-ballast valve has an influence on the ultimate pressure of the machine, see *Technical Data* [➔ 69].

2.4.2 Inlet Filter

The inlet filter protects the machine against dust and other solids in the process gas. The inlet filter is available with a paper or polyester cartridge.

For the machine version with cabinet, the inlet filter must be installed outside the cabinet.

2.4.3 Water-Oil Heat Recovery Unit

For heat recovery purpose or in case of unfavorable ambient conditions, a water-oil heat exchanger can be fitted on the machine. See *Cooling Water Connection (Optional)* [➔ 24].

2.4.4 Electro-pneumatic Inlet Valve

WARNING

Maximum permissible inlet weight (inlet connection).

The maximum permissible inlet weight is 100 kg.

- Do not exceed the maximum permissible weight!

CAUTION

Electro-pneumatic inlet valve pressure.

Risk of injuries!

Risk of damage to the machine!

- When installing the optional electro-pneumatic inlet valve, the inlet gas pressure sensor (PS) must be moved from its factory position (vacuum pump inlet flange) to the G1/4" port provided in the upper part of the electro-pneumatic valve, see *Electro-Pneumatic Inlet Valve Connection (Optional)* [➔ 27]. The plug from the G1/4" port of the valve must be reinstalled in the G1/4" port of the inlet flange, where the pressure sensor (PS) was removed.

NOTE

To actuate the valve, compressed air must be supplied.

Default position of the valve: “normally closed”.

Connection size:

- DN100 ISO-F

The electro-pneumatic inlet valve is pilot operated and opens automatically when the machine starts and closes when it stops.

The opening and closing of the valve can be delayed by the Warm-up & Cool-down modes of the machine.

For more information, see *Electro-Pneumatic Inlet Valve Connection (Optional)* [➔ 27].

2.4.5 OTTO IoT Box



The machine can be equipped with the OTTO IoT Box. This allows the vacuum pump to connect to the Busch Cloud and collect real-time measurement data during operation.

The IoT system consists in:

- The IoT Box,
- A GSM antenna,
- Sensors (pressure sensor, resistance thermometer).

For the activation and setup of this optional function, contact your Busch representative.

For more information, consult the specific instruction manual for the "OTTO IoT Box" (article number 0870236702) or contact your Busch representative.

2.4.6 I/O and Communication Port

If the “Remote control package” option is selected (recommended when combining several R5 RA 0840 B PLUS machines with a BUSCH ECOTORQUE Master Control):

The control unit (CU) is equipped with a M12 I/O port and a RJ45 communication port (MODBUS) that can allow remote control and monitoring of the machine.

By using the cable supplied with the machine and making the bridges described below in the customer's electrical installation, it is possible to operate the machine in one of three following modes:

- Setup I/O port,
- Power supply,
- Machine remote start.

Setup I/O port

Connector type: M12 12p female A coded (connection cable included in the scope of supply).

NOTICE

Wiring diagrams.

For more information on the following wiring diagrams, refer to the electrical wiring diagram inside the control unit (CU).

Power Supply

- 24V DC power supply - Max 1.5 A

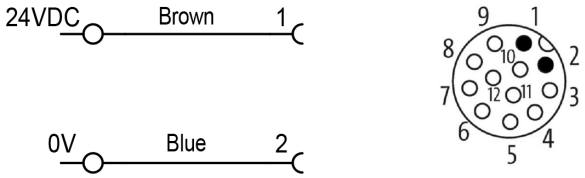

Remote Pump Start

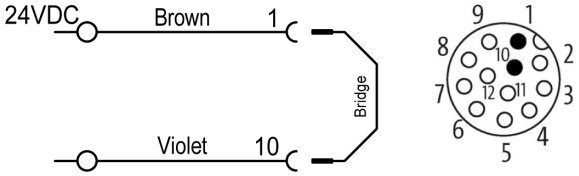

It allows the machine to be started by an external signal.

If pins 1 and 10 are bridged, the machine will start according to the settings of the HMI.

NOTE

In case of a remote-control start, the machine must be integrated in the user's safety chain (signal warning the user to stop the machine in case of problem or emergency stop).

Emergency Start

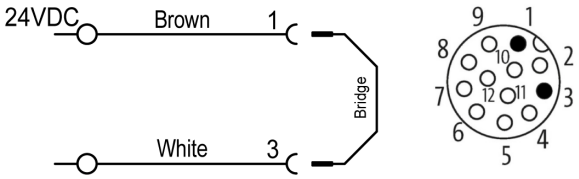

In case of HMI failure, refer to the electrical wiring diagram inside the control unit (CU). The machine then operates at 100% speed and the inlet valve is open.

NOTE

No more settings are possible, but the safety chain and the dry contact remain functional.

External Safety Switch

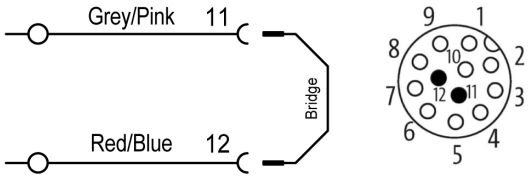

It allows to add an external safety element.

- Put a dry contact.

NOTE

If a remote control package is installed but the external safety switch is not used, place the supplied red bridge across terminals X1-26 and X1-28 inside the control unit.

External Contact (Pump Status)

- M12 connector Max 30V AC/DC 1.5A
- On terminal Max 250V AC/DC 10A

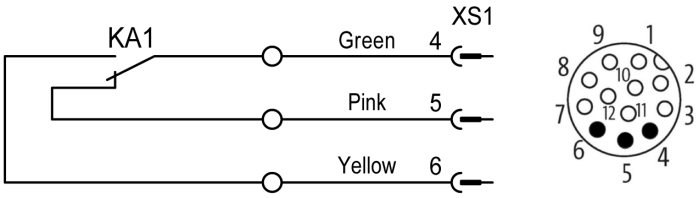

NOTE

System error, chain safety, EMO.

This contact gives information about the status of the machine and changes its status if an event such as an error, a thermal fault or an emergency stop occurs.

- Status:
  - Normal run: Pin 4-6 OFF / Pin 4-5 ON
  - In case of error: Pin 4-6 ON / Pin 4-5 OFF

Dry Contact

- M12 connector: Max 30VAC/DC 1.5A
- On terminal: Max 250VAC/DC 10A

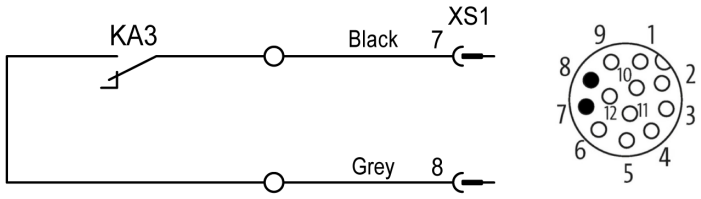

- Activation according to the settings of the HMI.

Analog Input

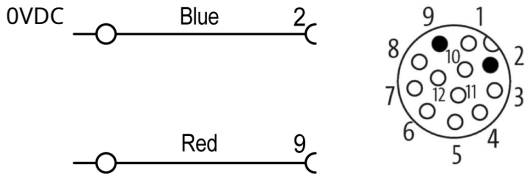

It allows to change the pumping speed with a 0 – 10 V DC signal.

NOTE

Make sure the 0 V DC pump is connected to the 0 V DC client of the analog signal.

Modbus Control

For more information:

- See *Modbus Control and Ethernet Settings (Optional)* [➔ 34].

2.4.7 Main Power Switch / Breaker

The machine can be equipped with a power switch for connecting or disconnecting it from the mains.

In case this power switch is not installed, an equivalent device must be installed in the customer's system.

Customer power supply

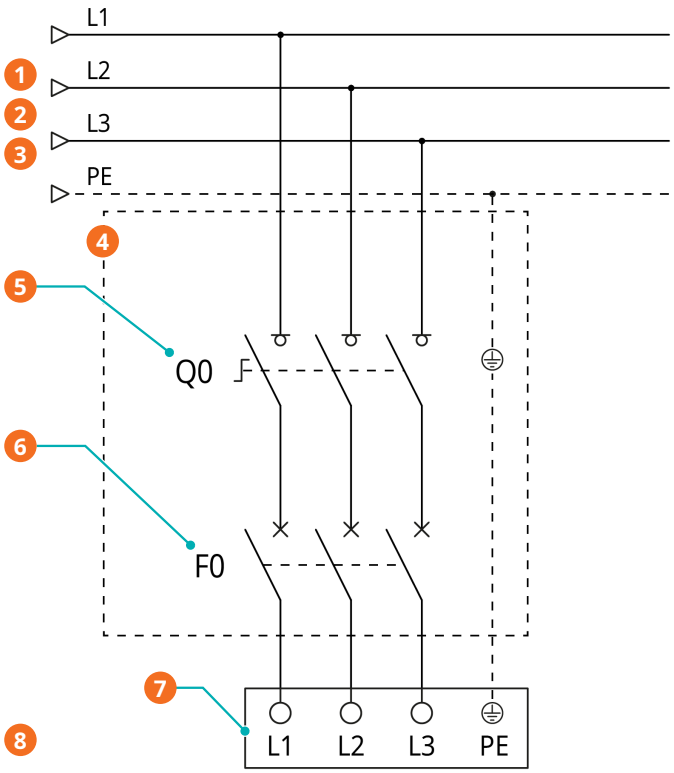

Description			
1	Power supply Standard Control Unit (IEC): 3L+PE 380-440V +/-10% (50/60Hz)	2	Power supply Optional UL Control Unit: 3L+PE 380-460V +/-10% (50/60Hz)
3	Wire gauge according to EN 60204-1	4	Must be provided by the customer
5	Lockable disconnect switch	6	Overload protection*
7	Vacuum pump terminal board (L1, L2, L3, PE to the control unit)	8	The complete wiring diagram of the control unit is placed inside the electrical cabinet.

* C-curve - 40A.

Cable gland size of the power input:

- M40 x 1.5 (cable ⌀ ► 20 ... 33 mm)

2.4.8 Industrial Quick Connector

The standard version of the machine is equipped with a cable gland (PWS).

The machine can be equipped with an industrial quick connector (see *Main Power Supply Connection* [➔ 32]).

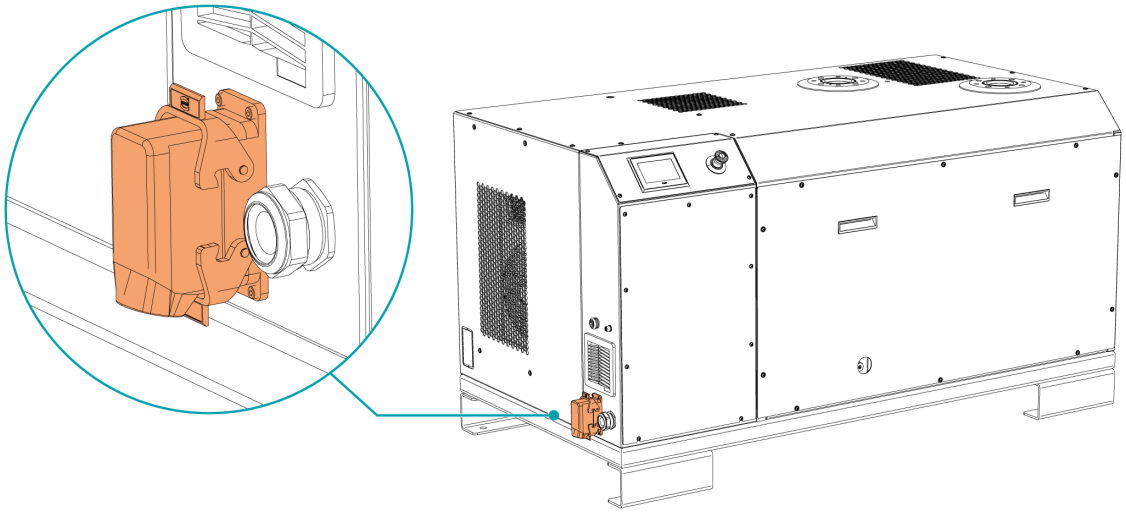

3 Transport and Handling

The following warnings and instructions are available for both machines, with and without cabinet.



WARNING

Suspended load.

Risk of severe injury!

- Do not walk, stand, or work under suspended loads.

NOTICE

If the machine is already filled with oil.

Tilting a machine already filled with oil can cause a large amount of oil to ingress into the cylinder. Starting the machine with excessive oil in the cylinder will immediately break the vanes and render it unusable!

- Drain the oil before each transport or always transport the machine horizontally.

- To find out the weight of the machine, refer to the chapter *Technical Data* [➔ 69] or the name plate (NP).
- Check that the machine has not been damaged during transport.

If the machine is mounted and secured on a transport support (pallet):

- Remove the machine from the transport support before installation.

NOTE

Specific handling depending on the machine version.

Refer to the following chapters:

- *Machine with Cabinet* [➔ 17].
- *Machine without Cabinet* [➔ 18].

3.1 Machine with Cabinet



WARNING

Transport and lifting.

Risk of severe injury!

- Handle the machine from its base frame with care to prevent the load from tipping over.
- Do not use straps, ropes or other lifting means.

Transport with a forklift

The machine must always be handled with care, using either a forklift or a pallet jack. Handling access must be from the underneath of the base frame (BF).

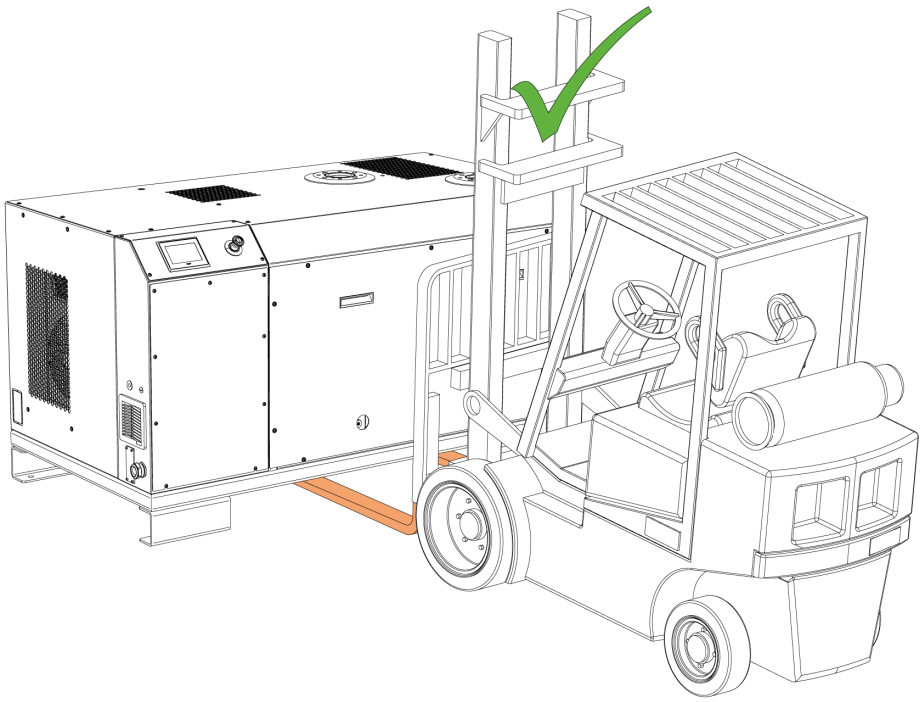

3.2 Machine without Cabinet



WARNING

Lifting the machine using the motor eye bolt.

Risk of severe injury!

- Do not lift the machine using the eye bolt fitted to the motor.
- Only lift the machine as shown.

- Use appropriate slings.
- Make sure that the eye bolt(s) (EB) is/are in faultless condition, fully screwed in and tightened by hand.

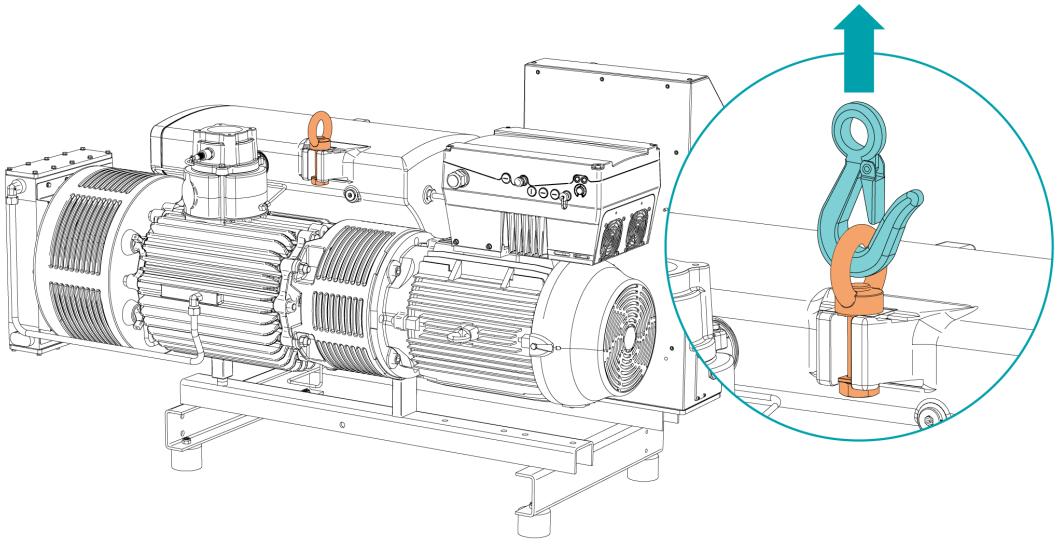

Transport with a forklift

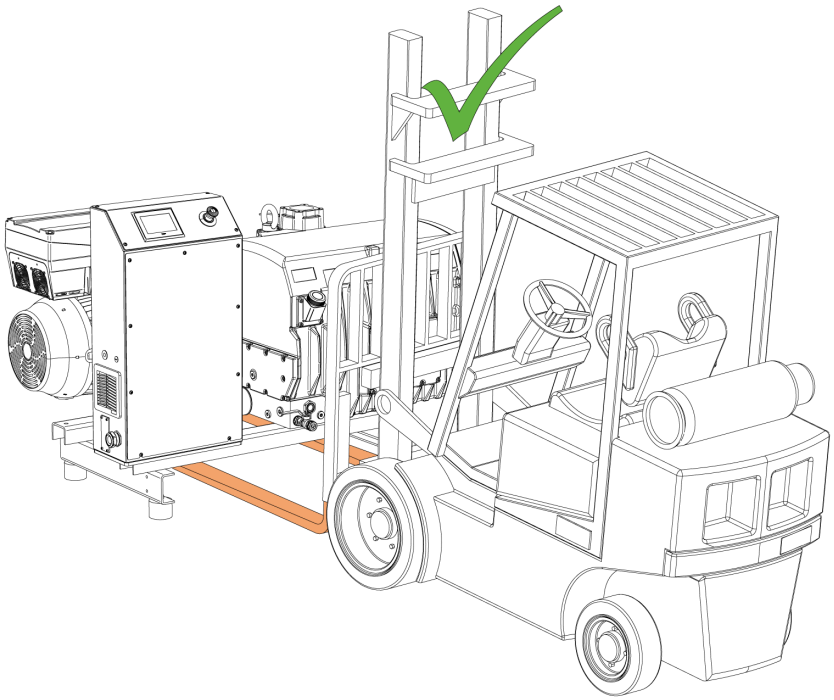

4 Storage

- Seal hermetically all apertures with the caps provided with the machine, or with adhesive tape if the caps are no longer available.
- Store the machine indoors, in a dry place, away from dust and vibrations and if possible, in original packaging, preferably at temperatures between 0 ... 30 °C.

If the machine is to be stored for more than 3 months:

- Carefully drain all the oil from the machine.
- Add, via the inlet connection (IN) and per small quantities, 3 liters of conservation oil, BUSCH article number 0831 570 966 (5-liter packaging).
- Remove the motor protective cover and turn the fan by hand a few turns in the direction indicated by the arrow on the motor, to ensure that oil is correctly applied to all surfaces of the pump stage.
- Seal hermetically all apertures with the caps provided with the machine, or with adhesive tape if the caps are no longer available.
- Wrap the machine in a VCI film (Vapor Corrosion Inhibitor).
- Store the machine indoors, in a dry place, away from dust and vibrations and if possible, in original packaging, preferably at temperatures between 0 ... 30 °C.
- Every 6 months, remove the motor protective cover and turn the fan by hand a quarter turn in the direction indicated by the arrow on the motor, to ensure that the static load of the rotor does not remain constantly applied to the same location on the bearings and shaft sleeves.
- Repeat the procedure of conservation after 12 months of immobilization.

Version with water-oil heat exchanger:

- Make sure that the cooling water has been completely drained, see Decommissioning.

When putting the machine back into service after storage:

- Carefully drain the conservation oil.
- Rinse the machine completely.
- Change the oil filter(s) before filling the machine with oil.

NOTICE

Long storage time (over 12 months).

Risk of damage to the machine!

- Due to a long storage time, the capacitors of the variable speed drive can lose efficiency because of electrochemical processes. In the worst case, it can lead to a short-circuit and therefore to a damage to the variable speed drive of the machine.
- Connect the machine every 18 months for 60 minutes to the mains.

5 Installation

5.1 Installation Conditions

NOTICE

Use of the machine outside of the permitted installation conditions.

Risk of premature failure!

Loss of efficiency!

- Make sure that the installation conditions are fully respected.

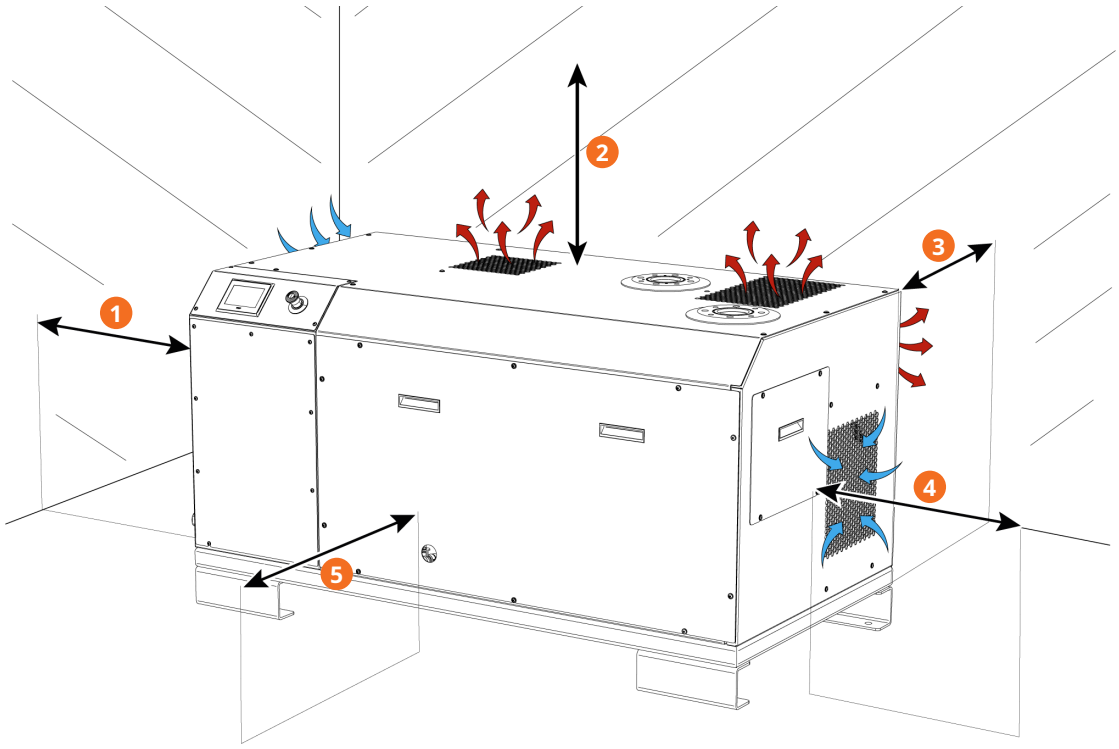

Description			
1	~100 cm	2	~50 cm
3	~50 cm	4	~100 cm
5	~100 cm		

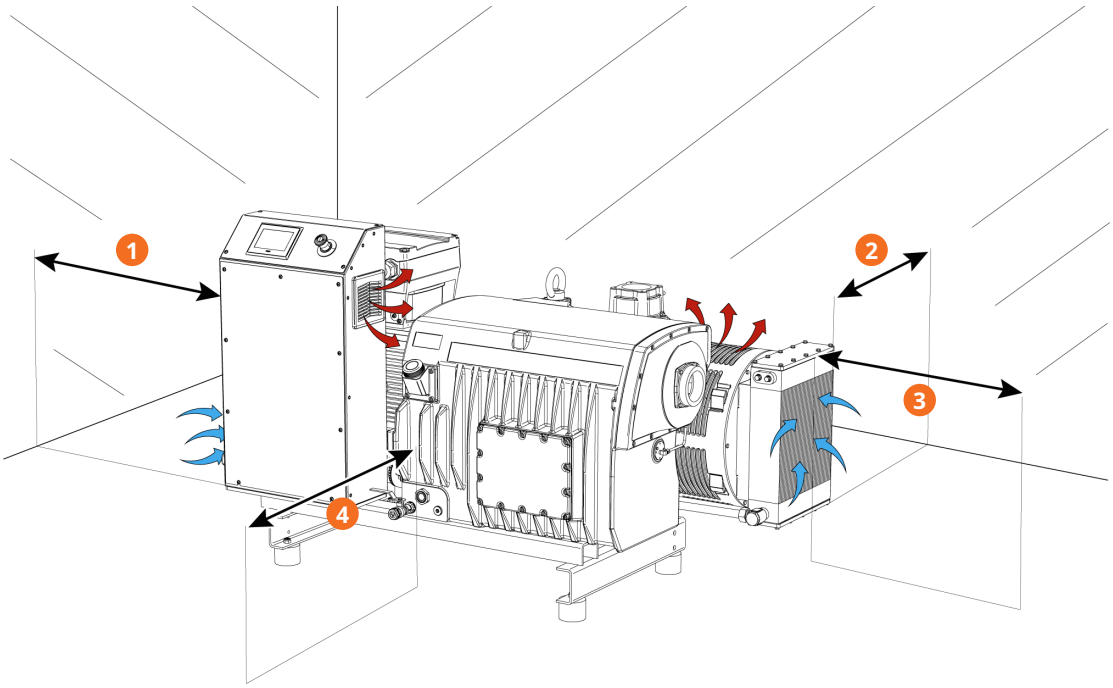

Description			
1	~100 cm	2	~50 cm
3	~100 cm	4	~100 cm

- Make sure that the environment of the machine is not potentially explosive.
- Make sure that the ambient conditions comply with the *Technical Data* [➔ 69].
- Make sure that the environmental conditions comply with the protection class of the motor and the electrical elements.
- Make sure that the environmental conditions comply with the protection class IP54.
- Make sure that the installation space or location is vented such that sufficient cooling of the machine is provided.
- Make sure that cooling air inlets (CAI) and outlets (CAO) are not covered or obstructed and that the cooling air flow is not affected adversely in any other way.
- Make sure that the oil sight glass (OSG) remains easily visible.
- Make sure that enough space remains for maintenance work.
- Make sure that the machine is placed or mounted horizontally, a maximum deviation of 1° in any direction is acceptable.
- Check the oil level, see *Oil Level Inspection* [➔ 56].
- Make sure that all provided covers, guards, hoods, etc. are mounted.

If the machine is installed at an altitude greater than 1000 meters above sea level:

- Contact your manufacturer representative, the motor must be derated or the ambient temperature limited.

5.2 Cabinet Panels

NOTE

The following illustrations show panel numbers.

- Refer to this chapter to find out which panel should be removed depending on the commissioning, maintenance or service operation required.

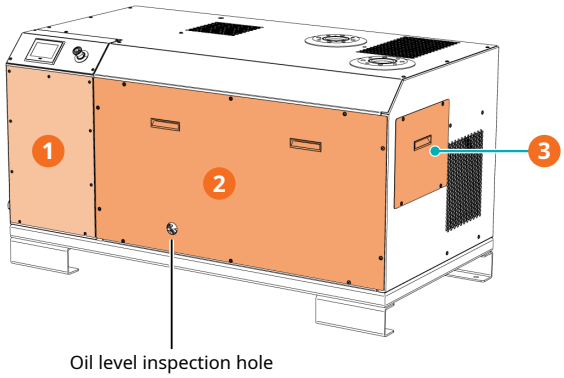

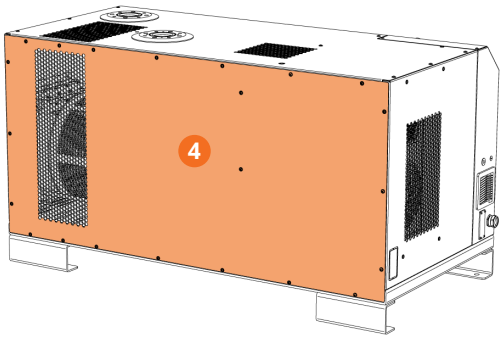

Operation	Panel to remove
Main Power Supply Connection [➔ 32]	Panel 1
Filling Oil [➔ 28]	Panel 2
Oil Level Inspection [➔ 56]	Through the hole in panel 2 (without removing the panel)
Oil and Oil Filter Change [➔ 56]	Panel 2
Exhaust Filter Change [➔ 58]	Panel 3
Air Heat Exchanger Cleaning [➔ 61]	Panel 4

5.3 Connecting Lines / Pipes

- Remove all protective covers before installation.
- Make sure that the connecting lines cause no stress on the connections of the machine. Therefore, we recommend installing flexible lines at the inlet and exhaust connections.
- Make sure that the diameter of the connecting lines over the entire length is at least as large as the connections of the machine.

In case of long connecting lines:

  - Use larger diameters to avoid a loss of efficiency.
  - Contact your manufacturer representative for more information.

- Make sure that the connection flanges are fitted with the appropriate gaskets.

5.3.1 Inlet Connection



WARNING

Unprotected inlet connection.

Risk of severe injury!

- Do not put hand or fingers in the inlet connection.

NOTICE

Ingress of foreign objects or liquids.

Risk of damage to the machine!

If the inlet gas contains dust or other foreign solid particles:

- Install a suitable filter (5 micron or less) at the inlet of the machine.
- The machine is not suitable for liquid aspiration.

Connection size(s):

- Machine with cabinet: DN80 PN6, EN 1092-1, ISO-F 80
- Machine without cabinet: G3”, ISO-F 80

If the machine is used as part of a vacuum system:

- Busch recommends the installation of an isolation valve to prevent the oil from flowing back to the vacuum system.
- Make sure that the connecting lines cause no stress on the connections of the machine. Therefore, we recommend installing flexible lines at the inlet and exhaust connections.

5.3.2 Exhaust Connection

CAUTION

The exhaust gas contains small amounts of oil.

Risk to health!

If air is released into rooms occupied by people:

- Make sure that adequate ventilation is provided.

NOTICE

The exhaust gas flow is obstructed.

Risk of damage to the machine!

- Make sure that the exhaust gas will flow without obstruction. Do not shut off or throttle the exhaust line or use it as a pressurized air source.

Connection size(s):

- Machine with cabinet: DN80 PN6, EN 1092-1, ISO-F 80
- Machine without cabinet: G3” Optional

Unless the air drawn in is directly released into the environment right at the machine:

- Make sure that the exhaust line slopes away from the machine. In the opposite case, provide a liquid separator or a siphon with a drain cock, to prevent liquids from flowing back into the machine.

- Make sure that the connecting lines cause no stress on the connections of the machine. Therefore, we recommend installing flexible lines at the inlet and exhaust connections.
- Make sure that the counter pressure (also called “back pressure”) at the exhaust connection (OUT) does not exceed the maximum allowable exhaust pressure, see *Technical Data* [➔ 69].

5.3.3 Cooling Water Connection (Optional)

Plate heat exchanger with inlet and outlet connection

RA 0840 B PLUS with cabinet

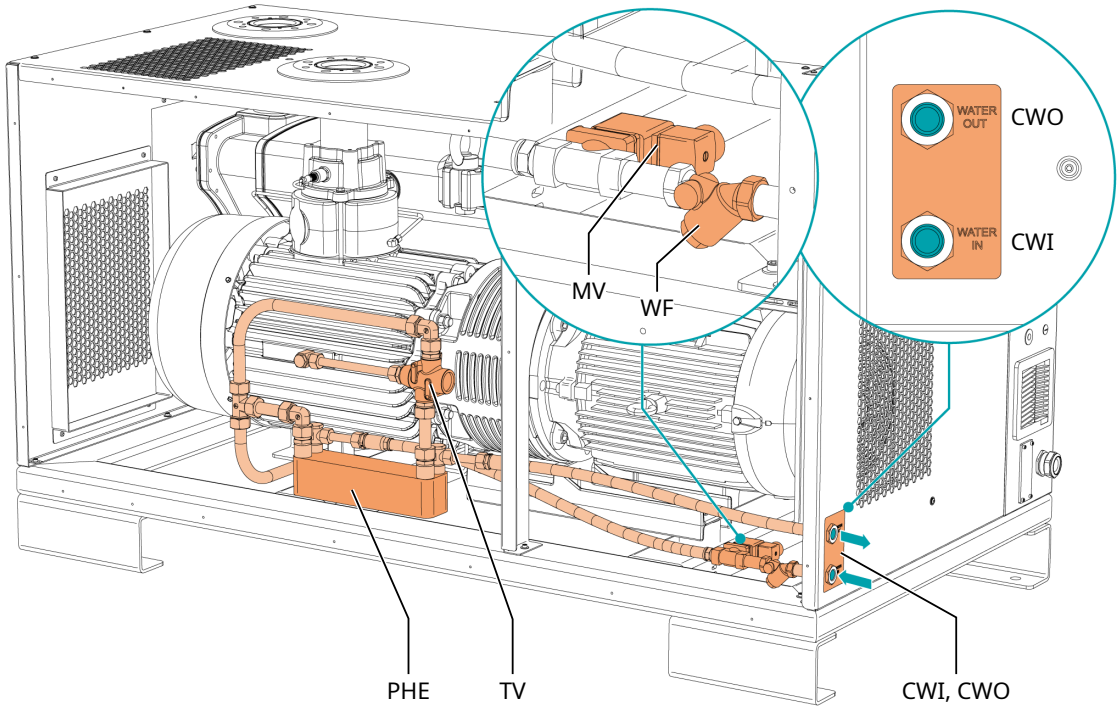

Description			
CWI	Cooling water inlet	CWO	Cooling water outlet
MV	Solenoid valve	PHE	Plate heat exchanger
TV	Thermostatic valve	WF	Water filter

Water-oil heat exchanger with inlet and outlet connection

RA 0840 B PLUS without cabinet

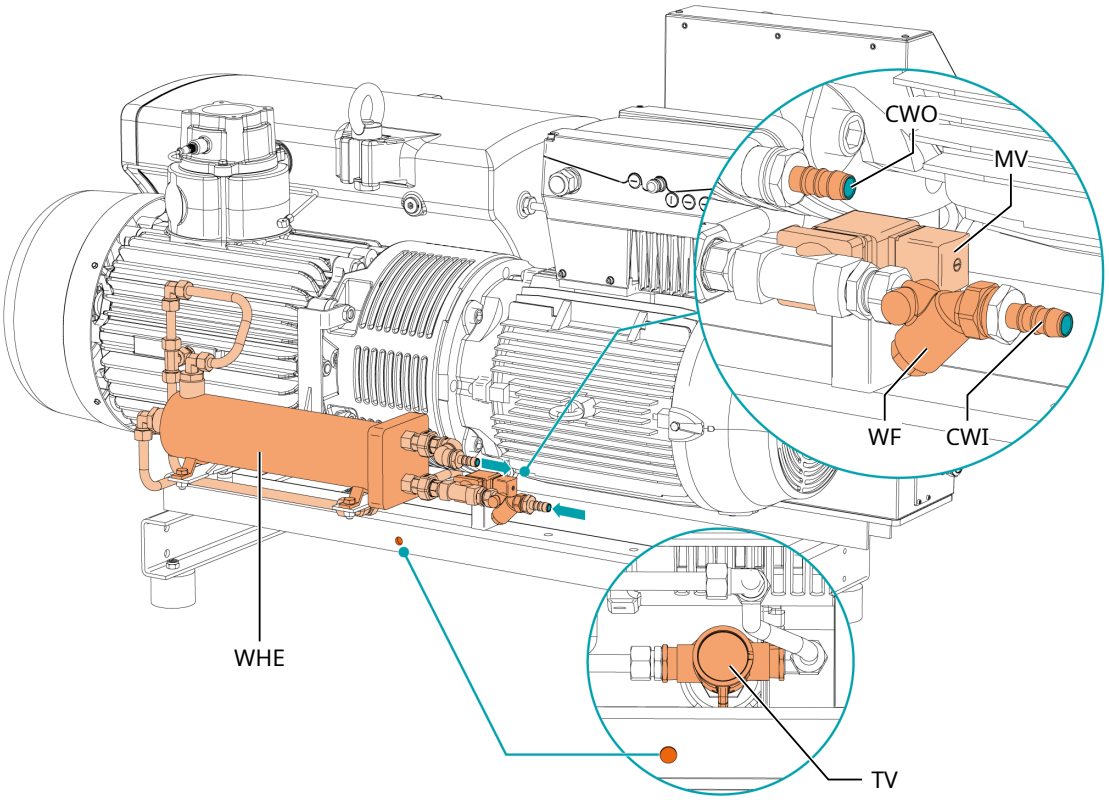

Description			
CWI	Cooling water inlet	CWO	Cooling water outlet
MV	Solenoid valve	TV	Thermostatic valve
WF	Water filter	WHE	Water-oil heat exchanger

The solenoid valve (MV) is used to stop the cooling water circulation when the machine is not running.

- Connect the cooling water connections (CWI / CWO) to the water supply.

Connection size(s):

- Machine with cabinet: R1/2 (CWI / CWO)
- Machine without cabinet: 19 mm hose (CWI / CWO)

- In case of retrofit of a water-oil heat recovery unit:
  - Electrically connect the solenoid valve (MV) to the control unit (CU), see wiring diagram in the control unit cabinet.
- Make sure that the cooling water complies with the following requirements:

Minimum supply capacity	l/min	5
Water pressure	bar (g)	2 ... 6
Supply temperature	°C	+5 ... +35
Required pressure differential across supply and return	bar	≥ 1

- To reduce the maintenance effort and ensure a long product lifetime, we recommend the following cooling water quality:

Hardness	mg/l (ppm)	< 90
Properties	Clean & clear	
PH value	7 ... 8	
Particle size	µm	< 200
Chloride	mg/l	< 100
Electrical conductivity	µS/cm	≤ 100
Free chloride	mg/l	< 0.3
Materials in contact with the cooling water	Stainless steel, copper and cast iron	



NOTE

Water hardness unit conversion.

1 mg/l (ppm) = 0.056 °dh (german degree) = 0.07 °e (english degree) = 0.1 °fH (french degree)

5.3.4 Electro-Pneumatic Inlet Valve Connection (Optional)

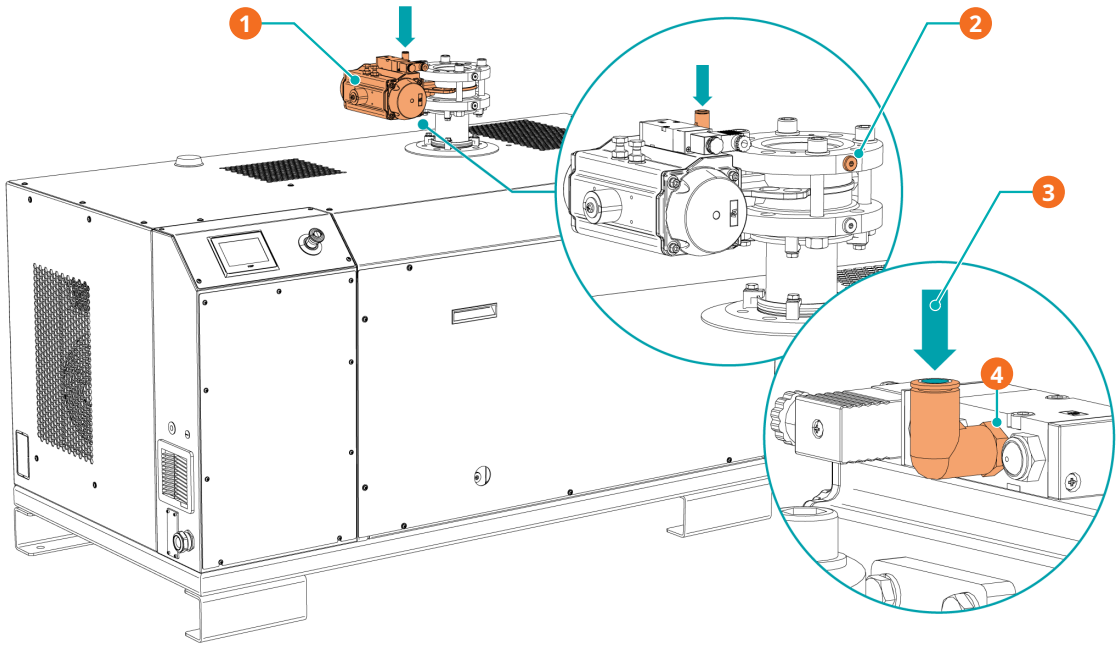

Description			
1	Electro-pneumatic inlet valve (EPIV)	2	Pressure sensor (PS) location
3	Compressed air intake	4	Elbow screw fitting, connexion size Ø 10 mm

Connection size:

- DN100 ISO-F

The electro-pneumatic inlet valve (EPIV) must be connected to a source of compressed air.

- Make sure the gas complies with the following requirements:

Gas type	Dry air	
Gas temperature	°C	0 ... 50
Pressure setting for actuation	bar (g)	1.5 ... 8
Actuation mode	Single acting actuator	
	Normally closed by lack of air	

5.4 Filling Oil

NOTICE

Use of inappropriate oil.

Risk of premature failure!

Loss of efficiency!

- Use only a type of oil previously approved and recommended by the manufacturer.

NOTICE

Replace mineral oil with synthetic oil (or vice versa).

Risk of using deteriorated oil!

Risk of premature failure!

By default, the oil temperature thresholds (warning/alarm) and the service intervals are configured based on the oil type (mineral or synthetic) indicated on the name plate (NP).

In case of change of oil type:

- Contact your Busch representative to adjust the thresholds and service intervals accordingly.

NOTE

Machine with cabinet.

To find out which panel should be removed for this operation:

- See chapter *Cabinet Panels* [➔ 22].

- For information on oil type and filling capacities, see the *Technical Data* [➔ 69] and *Oil* [➔ 70] chapters.

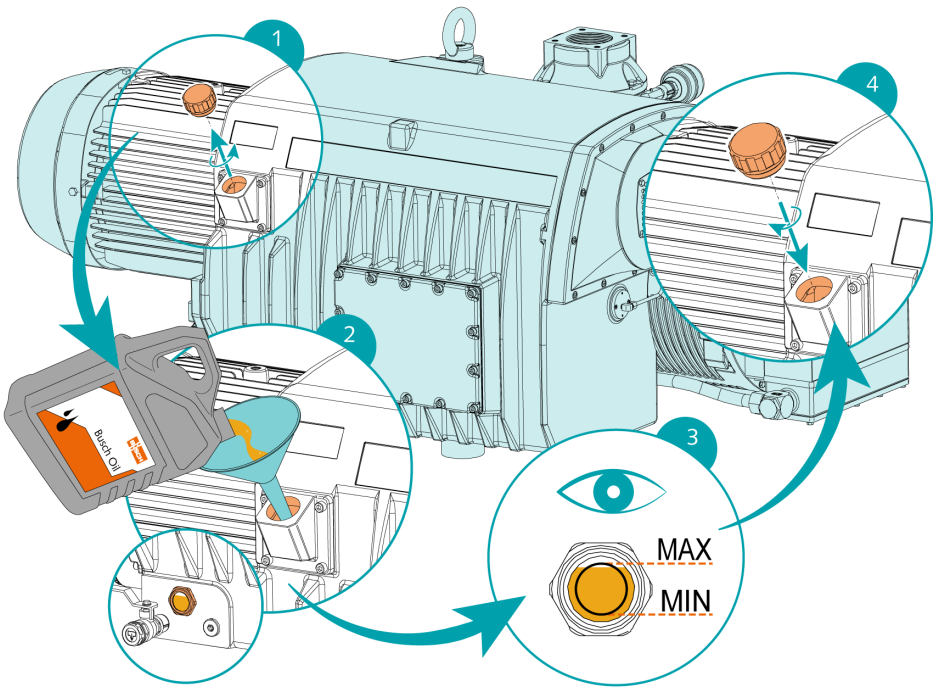

5.5 Fitting the Coupling

NOTE

Radial screws.

For trouble-free operation, use thread locking glue to secure any radial screw.

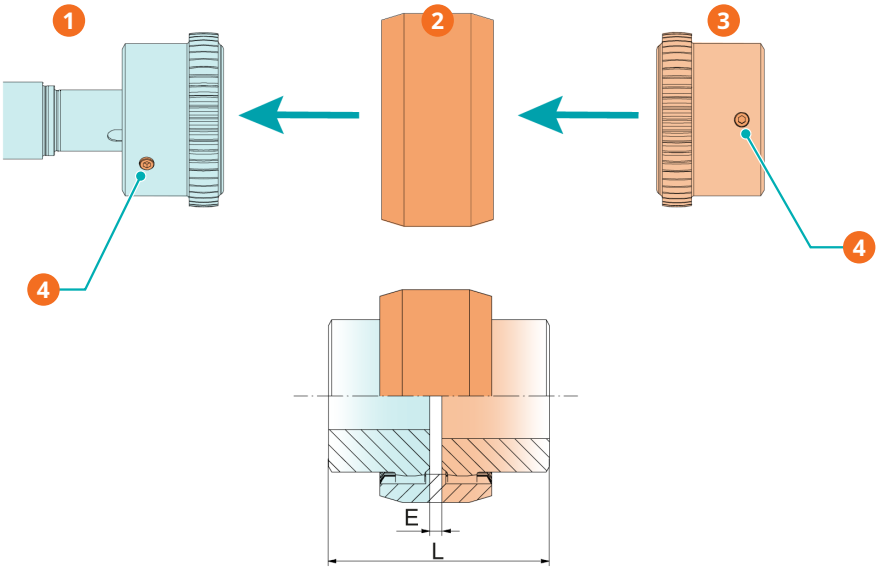

Description			
1	Coupling hub (machine side)	2	Coupling sleeve
3	Coupling hub (motor side)	4	Radial screw / Tightening torque: 17 Nm

Coupling size	Value “E” (mm)	Value “L” (mm)
BoWex® M-65	4	114

In case of delivery of a machine without motor:

- Fit the second coupling hub on the motor shaft (supplied separately).
- Adjust the sleeve axially to reach the value “E” (or “L”).
- Once the coupling has been adjusted, lock the coupling hub by tightening the radial screw.
- Mount the motor on the machine, including the coupling sleeve.

For more information on coupling, visit *www.ktr.com* and download the BoWex® Coupling Instruction Manual.

6 Electrical Connection



DANGER

Live wires.

Risk of electrical shock!

- Electrical installation work must only be executed by qualified personnel.

INSTALLATION(S) CURRENT PROTECTION:



DANGER

Missing current protection.

Risk of electrical shock!

- Provide current protection in accordance with EN 60204-1 on your installation(s).
- The electrical installation must comply with the applicable national and international standards.

NOTICE

Electromagnetic compatibility.

- Make sure that the motor of the machine will not be affected by electric or electromagnetic disturbance from the mains. If necessary, contact your Busch representative for more information.
- Make sure that the EMC of the machine is compliant with the requirements of your supply network system, if necessary, provide further interference suppression (EMC of the machine, see *EU Declaration of Conformity* [➔ 71] or *UK Declaration of Conformity* [➔ 72]).

6.1 PLUS Machine



DANGER

Live wires. Carry out any work on the variable speed drive and motor.

Risk of electrical shock!

- Electrical installation work must only be executed by qualified personnel.



DANGER

Maintenance work without switching off the power supply to the control unit.

Risk of electrical shock!

- Switch off the power supply to the control unit with a lockable disconnect switch before attempting any work on it. High voltages are present at the terminals and within the variable speed drive for up to 10 minutes after disconnecting the electrical supply.
- Always ensure, by using a suitable two-pole voltage tester, that no voltage is present on any drive power terminals before starting any work.



DANGER

Maintenance work without disconnecting the variable speed drive.

Risk of electrical shock!

- Disconnect and isolate the variable speed drive before attempting any work on it.
  High voltages are present at the terminals and within the variable speed drive for up to 10 minutes after disconnecting the electrical supply.
- Always ensure, by using a suitable two-pole voltage tester, that no voltage is present on any drive power terminals before starting any work.

- Make sure that the power supply is compatible with the data on the name plate of the control unit (CU).
- If the machine is equipped with a power connector, install a residual current protective device to protect persons in case of a defective insulation.
  - Busch recommends installing a type B residual protective device suitable for the electrical installation.
- If the control unit is not equipped with a lockable disconnect switch, provide it on the power line so that the machine is completely secured during maintenance tasks, or in case of an emergency.
- Provide an overload protection according to EN 60204-1.
  - Busch recommends installing a C-curve circuit breaker.
- Connect the protective earth conductor.
- Electrically connect the machine to the main power supply.
  - See *Main Power Supply Connection* [➔ 32].

NOTICE

The admissible motor speed exceeds the recommendation.

Risk of damage to the machine!

- Check the admissible motor speed range, see *Technical Data* [➔ 69].

NOTICE

Incorrect connection.

Risk of damage to the control unit!

- The wiring diagrams below are examples only. See inside the control unit for connection instructions and diagrams.

6.2 Main Power Supply Connection

Cable gland size of the power input:

- M40 x 1.5 (cable ⌀ ►20 ... 33 mm)

Standard Connector

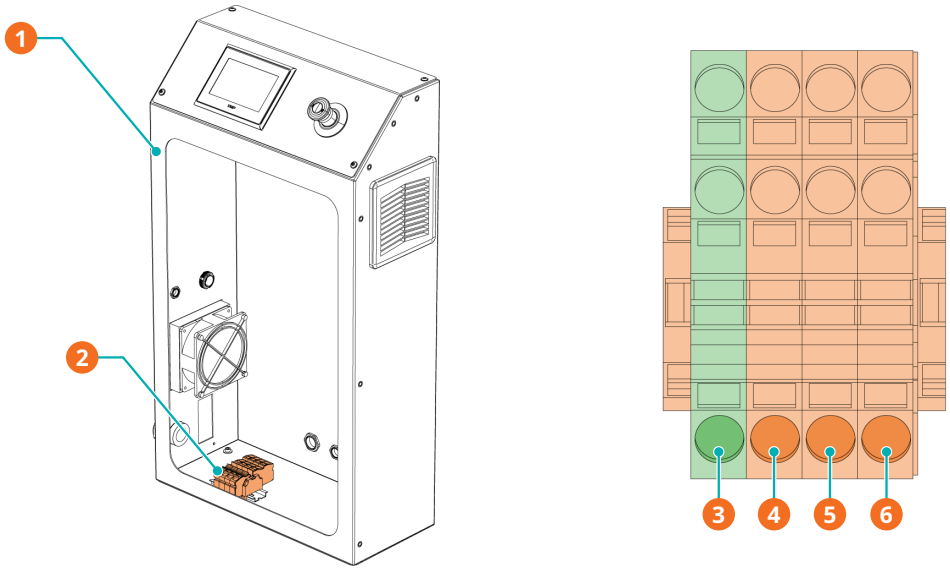

Description			
1	Control unit (CU)	2	Main power supply connection (inside the control unit - CU)
3	PE	4	L1
5	L2	6	L3

Optional *Industrial Quick Connector* [➔ 15]

- Pin configuration (380-460VAC)

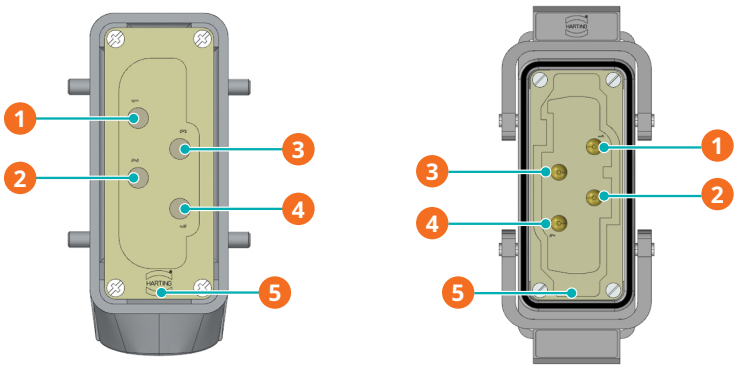

Description			
1	L1	2	L2
3	L3	4	Not used
5	PE		

Plug	
Connector rated current	80A @ 40°C
Maximum voltage	480V
Square cable	sq 1.5 ... 16 mm²
AWG gauge	AWG 16 ... 6
Cable entry	M32 x 1.5mm

6.3 Modbus Control and Ethernet Settings (Optional)

The user interface (HMI) works in Modbus with “Holding Registers”, readable and writable, 16 bits.
The default ethernet settings are the following:

Description	Default value
IP address	192.168.0.100
Subnet mask	255.255.255.0
Gateway	192.168.0.1
Port no.	502 (cannot be changed)
Slave ID no.	1-255 (all are functioning)

To control the machine via Modbus TCP/IP:

- Select the control mode “Remote/Modbus control”.
- Connect your system to the ethernet RJ45 port located on the left side of the control unit.

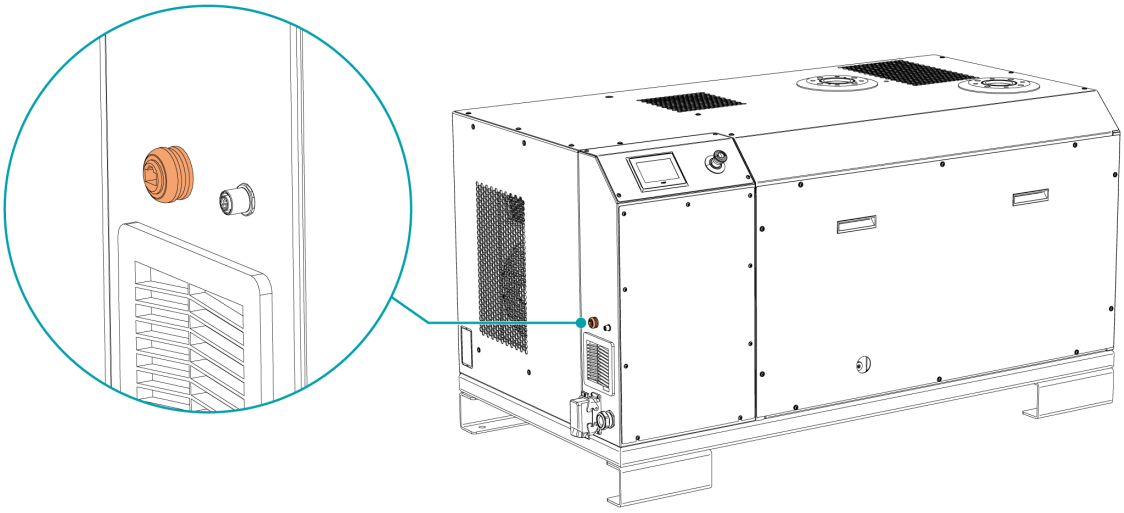

- Configure the *Ethernet Settings* [➔ 51].

NOTE

Monitoring via Modbus.

Do not activate Remote/Modbus for sole monitoring purpose.
This mode is only activated if the machine is fully controlled via Modbus.

7 Commissioning



CAUTION

In operation, the surface of the inlet and exhaust connections may reach temperatures over 70°C.

Risk of burns!

- Avoid contact with these surfaces during and directly after operation.



CAUTION

In operation, the surface of the machine may reach temperatures over 70°C.

Risk of burns!

- This warning applies to the R5 RA 0840 B PLUS without cabinet and to the vacuum pump inside the R5 RA 0840 B PLUS with cabinet.
- Avoid contact with the machine during and directly after operation.

CAUTION



Noise of running machine.

Risk of damage to hearing!

If people are present in the vicinity of a machine that is not insulated from noise for extended periods of time:

- Make sure to wear hearing protection.

NOTICE

The machine is normally shipped without oil.

Operation without oil will ruin the machine in short time!

- Before commissioning, the machine must be filled with oil, see *Filling Oil* [➔ 28].

- Make sure that the *Installation Conditions* [➔ 20] are met.

Version with water-oil heat exchanger:

- Make sure that the cooling water complies with the requirements, see *Cooling Water Connection (Optional)* [➔ 24].
- Open the water supply.

- Switch the machine “on” or “off” at the Touch Screen. The Touch Screen shows the actual machine status and the data of the different sensors and of the variable speed drive (see *Description of User Interface Functions* [➔ 36]).
- Make sure that the operating conditions comply with the *Technical Data* [➔ 69].
- After a few minutes of operation, perform an *Oil Level Inspection* [➔ 56].

As soon as the machine is used under normal operating conditions:

- Measure the motor current and record it as reference for future maintenance and troubleshooting work.

- Fill in system settings (such as date/time, language and units), see *System Settings* [➔ 48].

7.1 Description of User Interface Functions

The following functions and parameters are available on the TOUCH SCREEN - HMI interface:

- Language selection (English at first step)
- Date and time
- Units such as pressure (mbar, hPa, TORR) and temperature (°C and °F)
- Inlet pressure
- Ethernet settings
- P&ID control settings
- Pressure control settings
- Service indicator such as operating hours, hours to next oil service

Interface overview

The menu consists of four main tabs (Home, Operations, Maintenance, System) with their own sub-tabs.

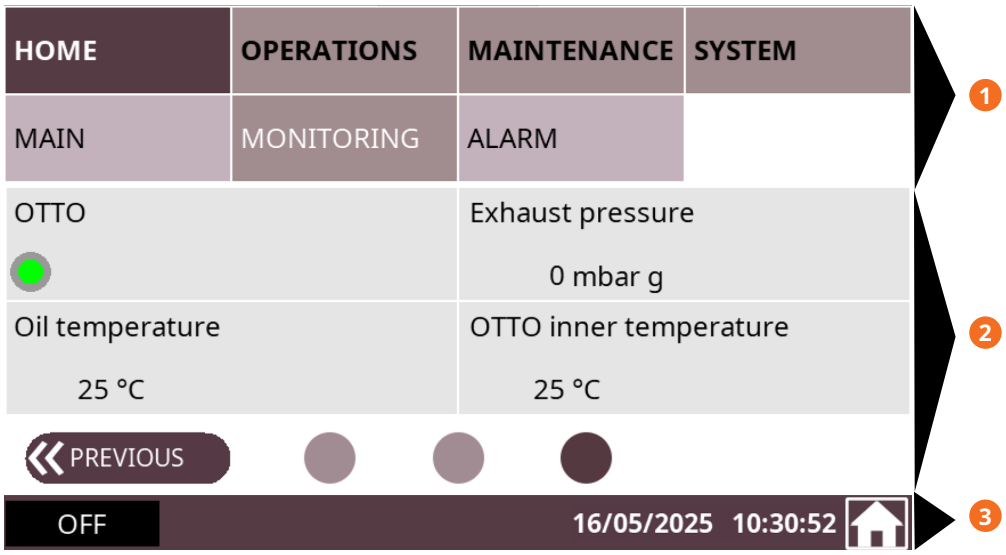

Description			
1	Menu tabs and sub-tabs	2	Information panel
3	Bottom bar		

7.1.1 Roles and Users

Three roles of user rights are predefined in the system.

Role 1 ► Operator

This role is intended for machine operators to control the machine (limited rights) or monitor operating values. It does not require any password.

Role 2 ► Installation/Maintenance technician

This role is intended for installation/maintenance technicians to configure the machine according to the application. The password for this role can be found in the separate sheet attached to this instruction manual and allows an access to the following features:

- Change operating mode,
- Reset hours before the next service,
- Set the remote control and monitoring parameters.

Role 3 ► Busch Service

Only authorized personnel from Busch Service have this level of access rights.

NOTE

In case of any questions related to the machine settings:

- Contact Busch Service.

When a password is required, the display shows the following screen:

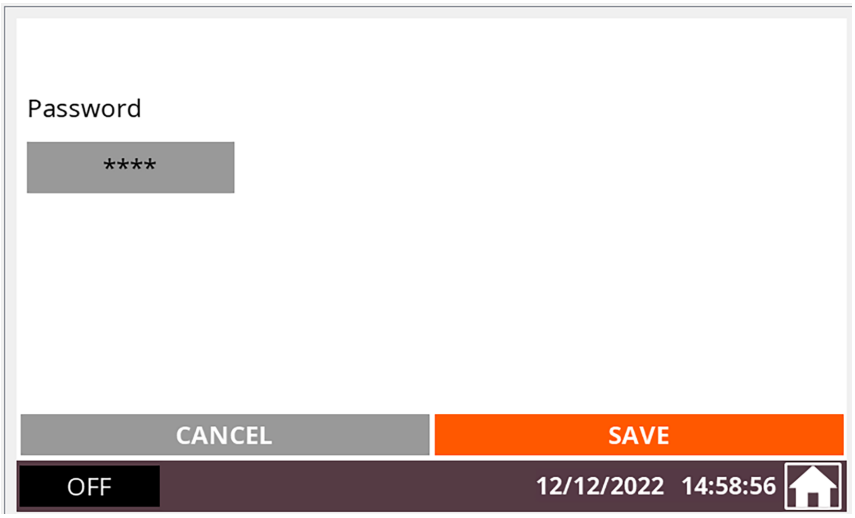

- Press the stars in the password field.
- Enter the correct password in the number pad according to your access right.
- Press “Save”.
- From now on, the specific rights are open for a limited period ► delay of 5 minutes.

7.1.2 Home

7.1.2.1 Main

The display “HOME > MAIN” is the main display.

It is mainly useful for live monitoring.

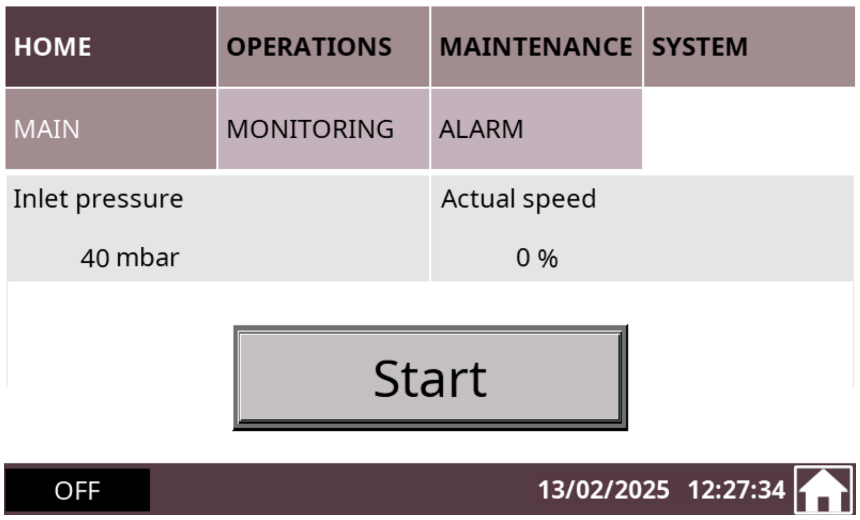

7.1.2.2 Monitoring (Operating Data)

The display “HOME” > “MONITORING” shows the operating values.

It is divided into three different screens/pages.

Screen/Page MONITORING 1

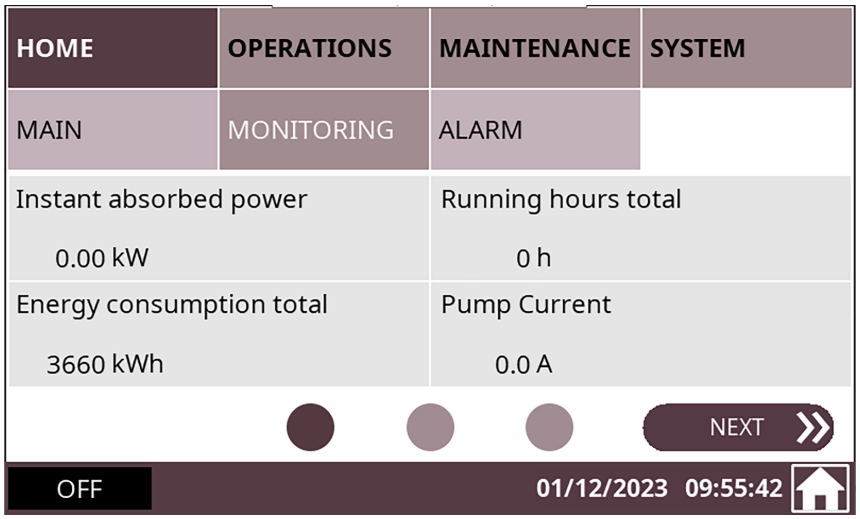

Instant absorbed power. Indicates in kW the absorbed power in real time.

Running hours total. Indicates the total number of operating hours since the first machine commissioning.

Energy consumption total. Indicates in kWh the total consumption of energy since the first machine commissioning.

Pump current. Indicates in ampere unit (A) the value of the pump current in real time.

Screen/Page MONITORING 2

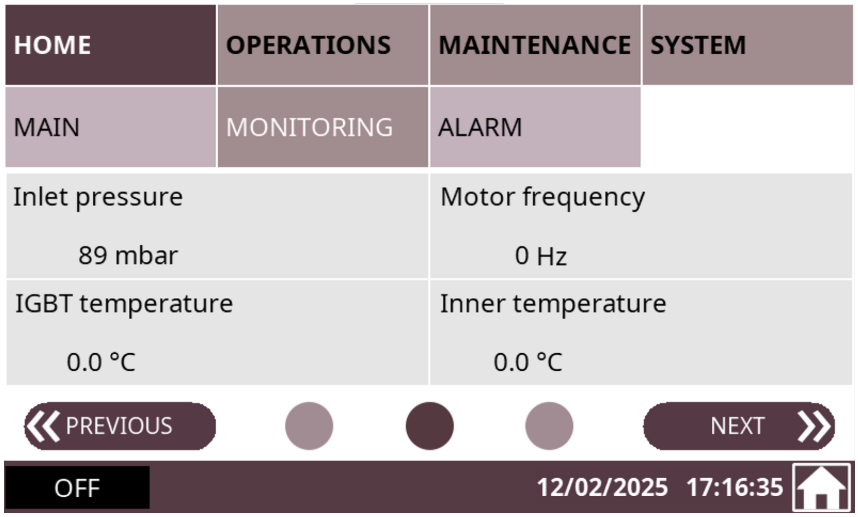

Inlet pressure. Indicates the pressure at the pump inlet when the pump is equipped with an inlet valve and when the function is activated.

Motor frequency. Indicates in Hz the current drive frequency.

IGBT temperature. Indicates the temperature of the insulated-gate bipolar transistor (IGBT) inside the variable speed drive (VSD).

Inner temperature. Indicates the temperature of the pump coolant. If the temperature is too high, an alarm occurs.

Screen/Page MONITORING 3

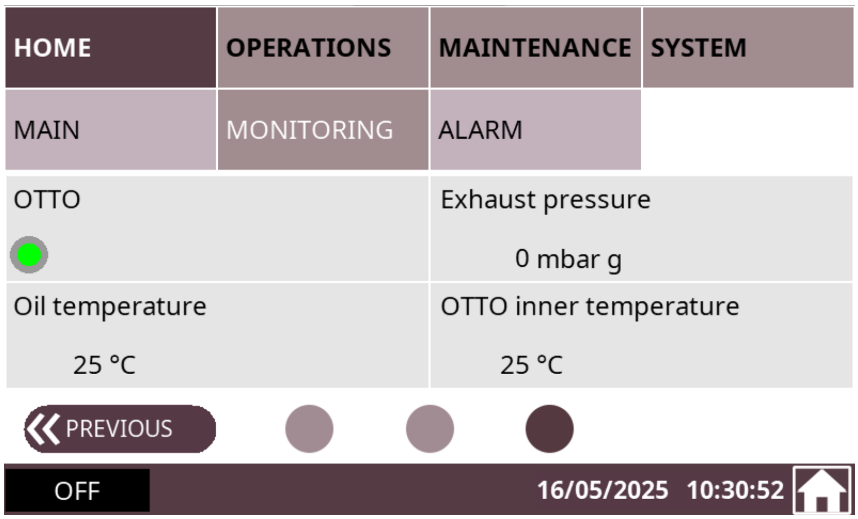

OTTO. Indicates if the IoT function is activated.

Exhaust pressure. Indicates in mbar(g), the pressure at the exhaust connection.

Oil temperature. Indicates the temperature of the oil.

OTTO inner temperature. Indicates the temperature value of the IoT Box.

7.1.2.3 Alarms

The display “HOME” > “ALARM” shows the history of the alarms’ signals registered by the pump monitoring sensors.

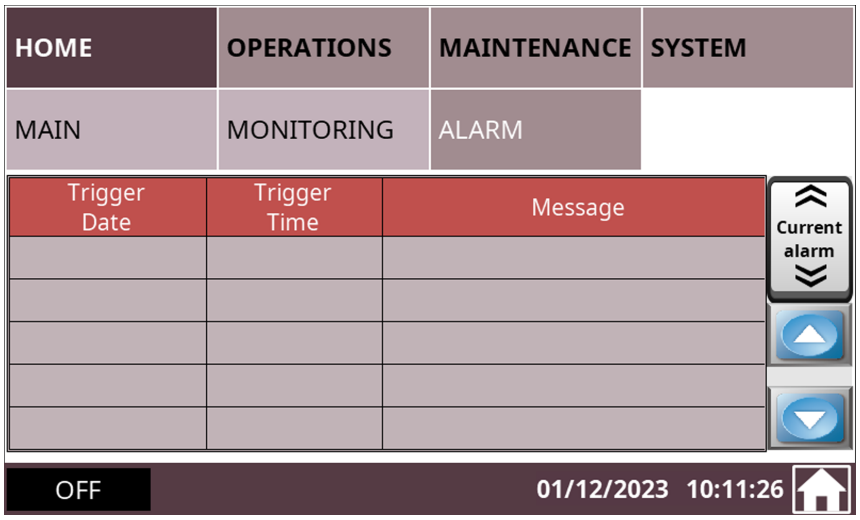

When an alarm occurs, an audible alarm sounds, and the user must acknowledge the default on the HMI interface.

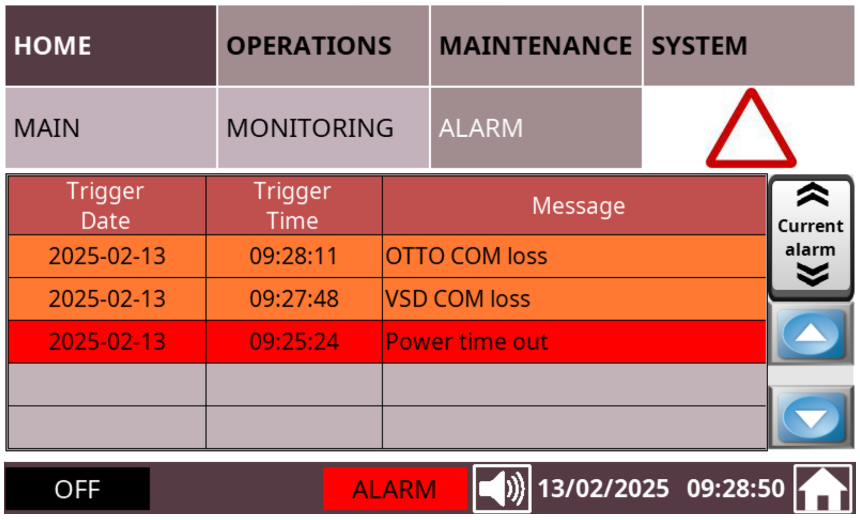

By pressing the “Current alarm” button, the display changes to “History alarm”.

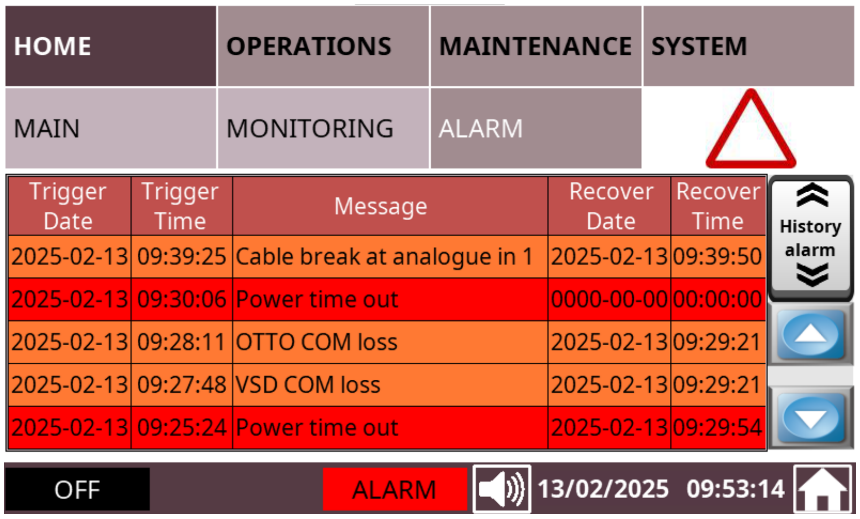

7.1.3 Operations

7.1.3.1 Operation Modes

The display “OPERATIONS > MODE” shows the modes of operation.

It allows the control of the machine.

- To access the operating mode menu:
  - Go to “OPERATIONS” > “MODE” and stay on the first screen/page.

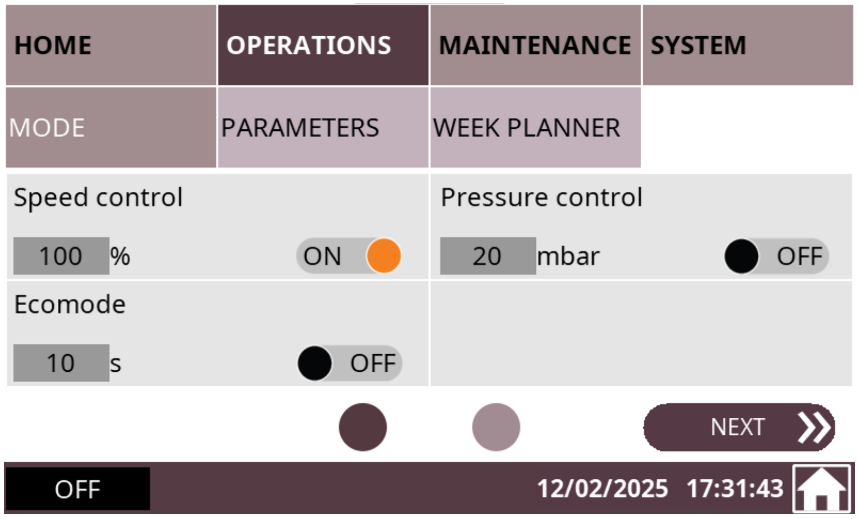

Speed control. Configured by default with a vacuum pump speed of 100 %, the speed control mode allows the variation of the motor frequency.

- To change the vacuum pump speed:
  - Press on the speed percentage (password required, see *Roles and Users* [➔ 37]).
  - Assign the desired frequency on the keypad and press “Enter”.

Parameter	Default value	Adjustment range*
Speed control (target speed)	100 %	1 ... 100 %

* In percentage of the operating speed range

- For more information on "pumping speed" versus "% speed", refer to the vacuum pump performance curves.

Pressure control. The pressure control mode allows to maintain a constant pressure level (target pressure) by automatically adapting the motor frequency.

- To switch from speed control to pressure control:
  - Press on the target pressure value (password required, see *Roles and Users* [➔ 37]).
  - Assign the target pressure on the keypad and press “Enter”.
  - Press on the switch button.

Parameter	Default value	Adjustment range
Pressure control (target pressure)	20	<5 ... 1000 mbar

- For smooth process pressure control, it is required to adjust the PID parameters.
- For more information, contact your Busch representative.

Ecomode - Function associated to the Pressure control.

The Ecomode stops the machine when the inlet pressure has reached the preset "Ecomode pressure" within a defined time delay and will restart once the inlet pressure exceeds the "Target pressure".

- To activate and set the Ecomode:
  - Press on the Ecomode switch button (password required, see *Roles and Users* [➔ 37]).

A green symbol flashes on the HMI as follows indicating that the Ecomode is activated:

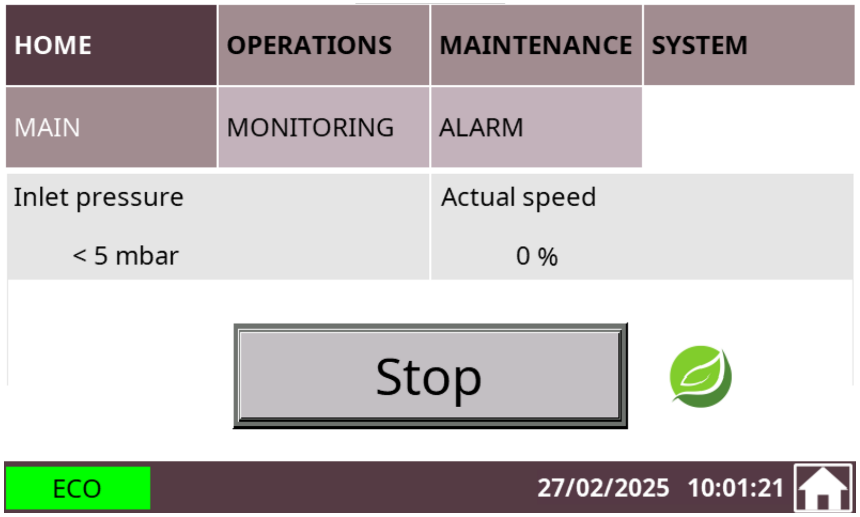

The second screen/page of the display “OPERATIONS > MODE” shows the active **Control mode** of the machine.

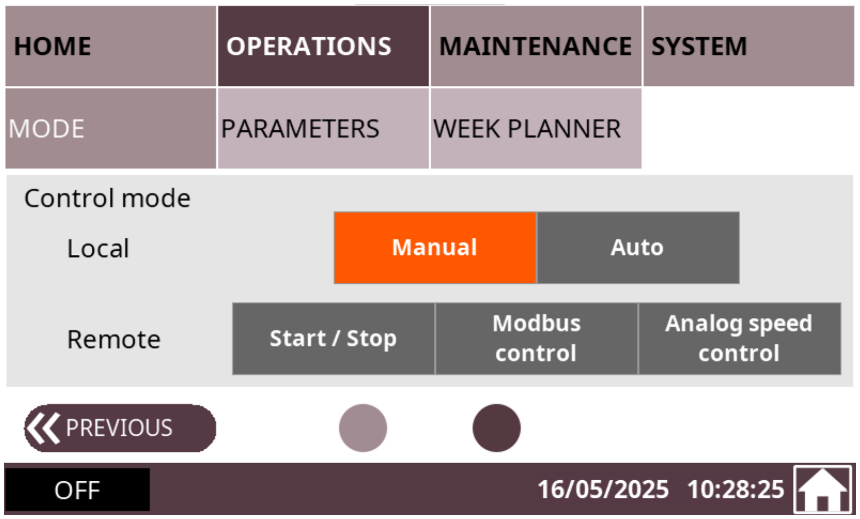

7.1.3.2 Operation Parameters

NOTICE

Change parameter values.

Risk of damage to the machine!

- For all the following functions with parameterization, Busch strongly recommends waiting until the end of a pump cycle before changing any parameter value!

The display “OPERATIONS > PARAMETERS” shows the operation parameters.

It is divided into three different screens/pages.

Screen/Page PARAMETERS 1

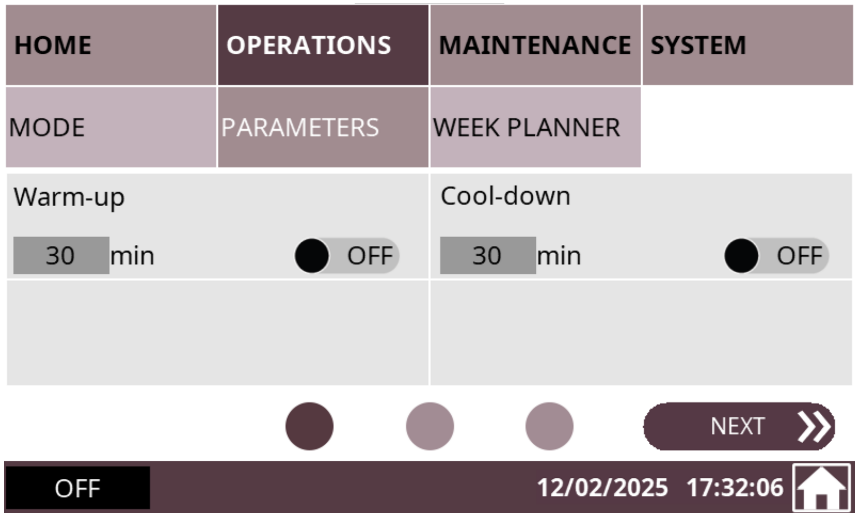

Warm-up and Cool-down modes

The warm-up mode allows the machine to obtain a suitable operating temperature for the process.

The cool-down mode allows the evacuation of any condensable vapors, refer to chapter *Conveying Condensable Vapors* [➔ 52] for conditions to be met.

During these phases, the machine operates at maximum speed, recommended with the gas-ballast valve open to warm up and evacuate a maximum humidity.

The warm-up mode and the cool-down mode can both be set with a target time (default value = 30 minutes).

- To activate these two modes:
  - Go to “OPERATIONS” > “PARAMETERS”.
  - Press on warm-up and/or cool-down switch button (password required, see *Roles and Users* [➔ 37]).

NOTE

When the warm-up and cool-down modes are activated, an isolation valve (not included in the scope of delivery of the vacuum pump) must be closed to allow the vacuum pump to operate at ultimate vacuum.

- The isolation valve can be automatically controlled by the pump during the warm-up and cool-down phases, see screen/page Parameters 2 “**Inlet valve control (Option)**”.
- In this case, the valve will open and close according to the instructions available in the chapter *Conveying Condensable Vapors* [➔ 52].

Screen/Page PARAMETERS 2

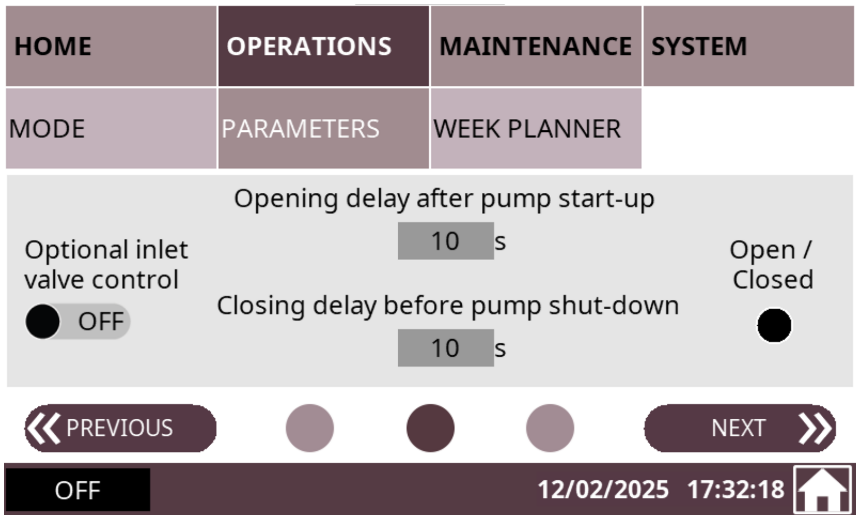

Inlet valve control (Option)

This menu allows the control and setting of the opening parameters of an inlet valve installed at the inlet side of the vacuum pump (not included in the scope of delivery of the vacuum pump).

- To activate the optional inlet valve control:
  - Go to “OPERATIONS” > “PARAMETERS”.
  - Go to the second screen/page.
  - Switch the optional inlet valve control on (password required, see *Roles and Users* [➔ 37]).

The Opening delay after pump start-up default value is 10 seconds.

- Press to change it.

Once the optional inlet valve control is enabled, the Open/Closed indicator light switches from black to orange.

NOTE

This function starts at the end of the warm-up phase of the machine.

NOTE

With the inlet valve, the inlet pressure sensor must be installed upstream of the inlet valve.

Screen/Page PARAMETERS 3

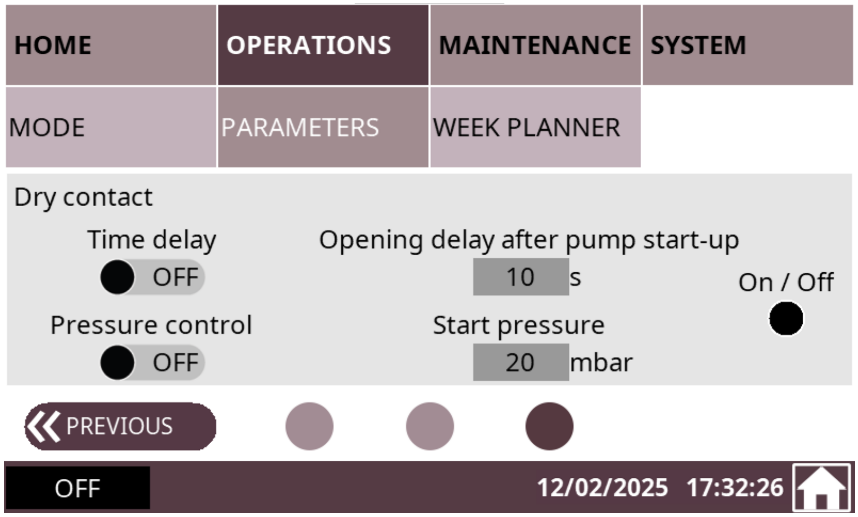

Dry Contact

- M12 connector: Max 30VAC/DC 1.5A
- On terminal: Max 250VAC/DC 10A

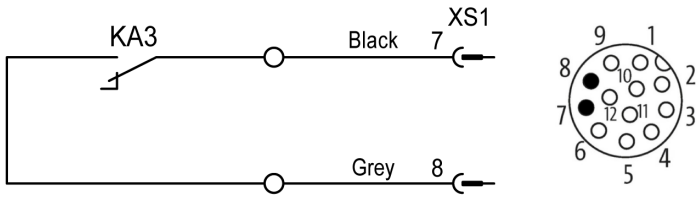

- Activation according to the settings of the HMI.

7.1.3.3 Operation Week Planner

The "week planner" function allows definition of a weekly schedule for starting or stopping the machine automatically using the current local settings. A single start and stop a day is possible.

To configure the weekly schedule:

- Go to “OPERATIONS” > “WEEK PLANNER”.
- Press on the days when automatic start and stop are required.
- Set up the start and stop times.

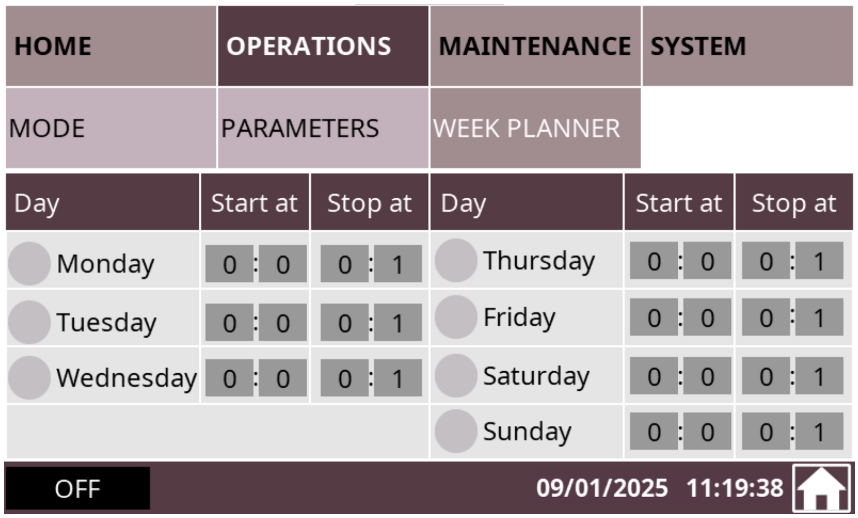

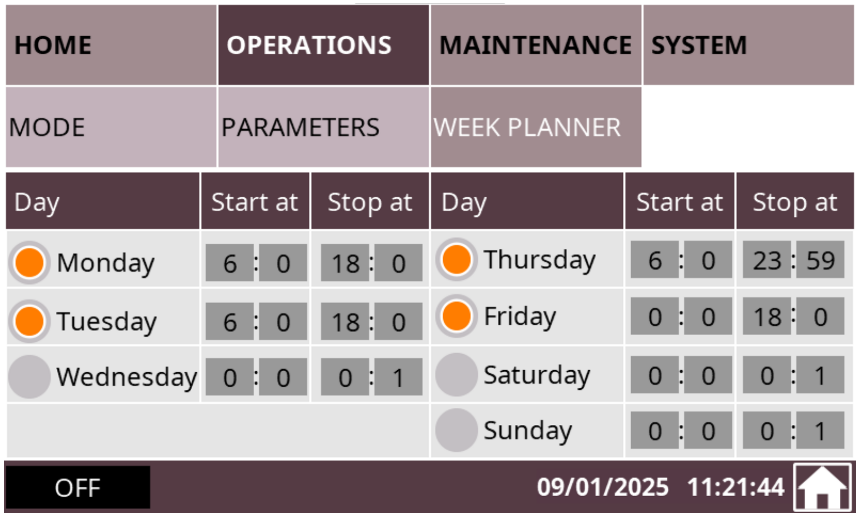

As soon as the schedule is filled in, the control mode “Local/Auto” has to be activated (by “Role 2” users only, see *Roles and Users* [➔ 37]):

- Go the second screen/page of “OPERATIONS” > “MODE” (see chapter Operation Modes).
- Select the mode “AUTO” in the “LOCAL” field (password required).

WARNING

The machine may start without notice.

Risk of severe injury!

As soon as the mode “Local/Auto” is activated:

- Make sure the machine is fully operational when the programmed schedule begins.

NOTE

To allow the machine to operate non-stop from one day to the next one, select 23:59 as the stop time on the first day and 00:00 as the start time on the second day.

NOTE

Manual starts and stops.

The week planner still allows manual starts and stops.

7.1.4 Maintenance

The display “MAINTENANCE” shows the maintenance and service intervals of the machine.

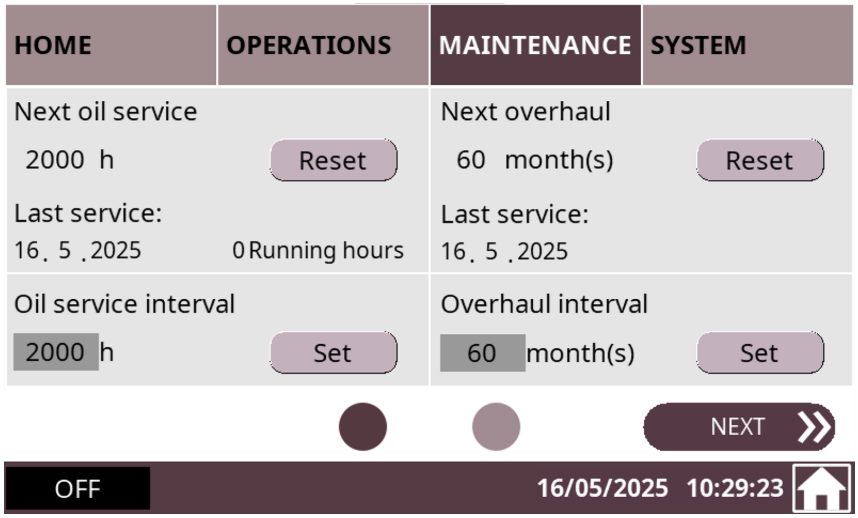

- Press “**Set**” to define the “**Oil service**” and “**Overhaul**” intervals.
- Press “**Reset**” to reset the operating hours (**running hours**) to 0 after an oil change and/or overhaul.

Screen/Page MAINTENANCE 2

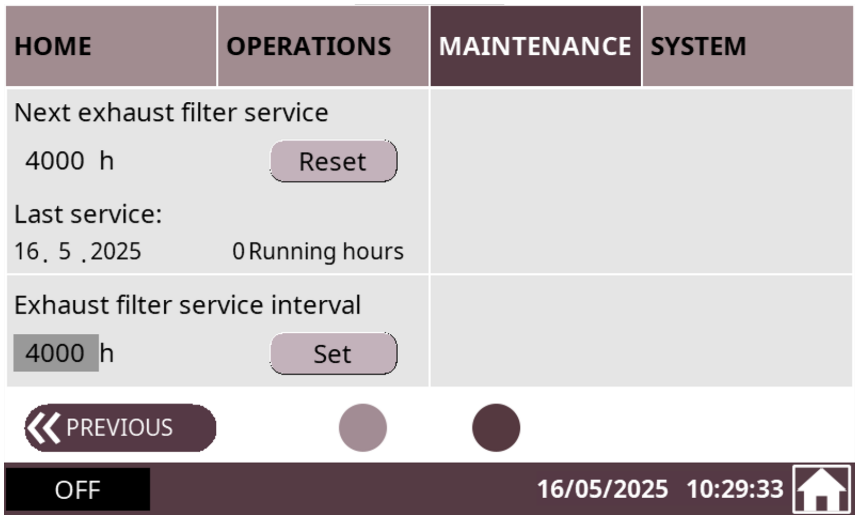

- Press “**Set**” to define the “**Exhaust filter service**” interval.
- Press “**Reset**” to reset the operating hours (**running hours**) to 0 after an exhaust filter change.

7.1.5 System

7.1.5.1 System Settings

The display “SYSTEM > SETTING” allows to set or change system settings.

Screen/Page SETTING 1

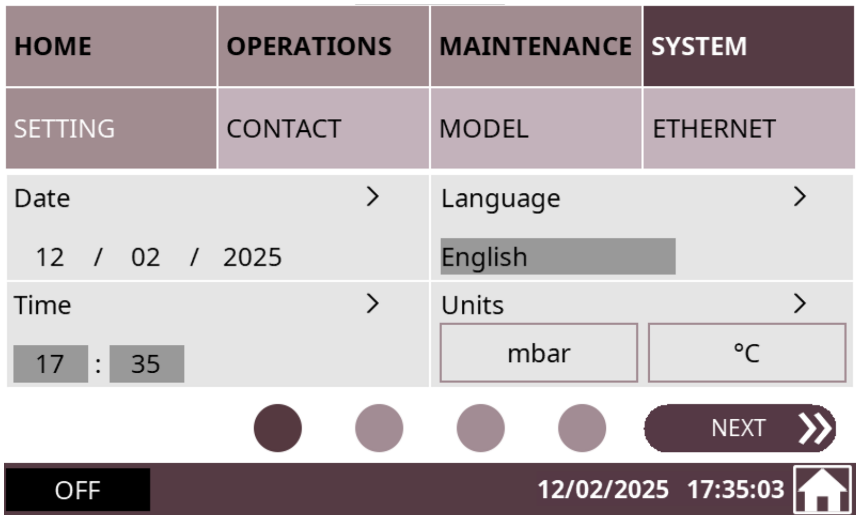

- To edit the system settings such as date, time, language, and units:
  - Go to “SYSTEM” > “SETTINGS”.
  - Press on the value to change the selected data.

Screen/Page SETTING 2

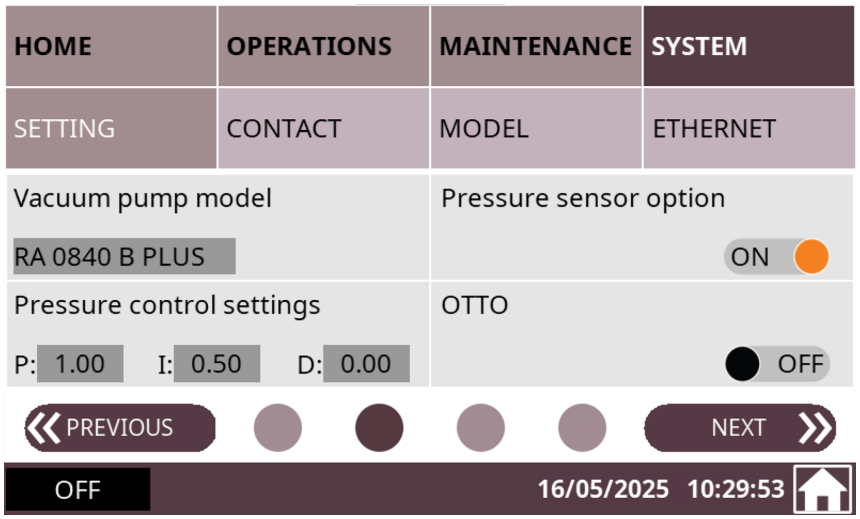

On the second screen/page, it is possible to edit some pump parameters like the pressure control settings (PID) or to activate/deactivate pump functions such as the pressure sensor (Option) or OTTO.

Screen/Page SETTING 3

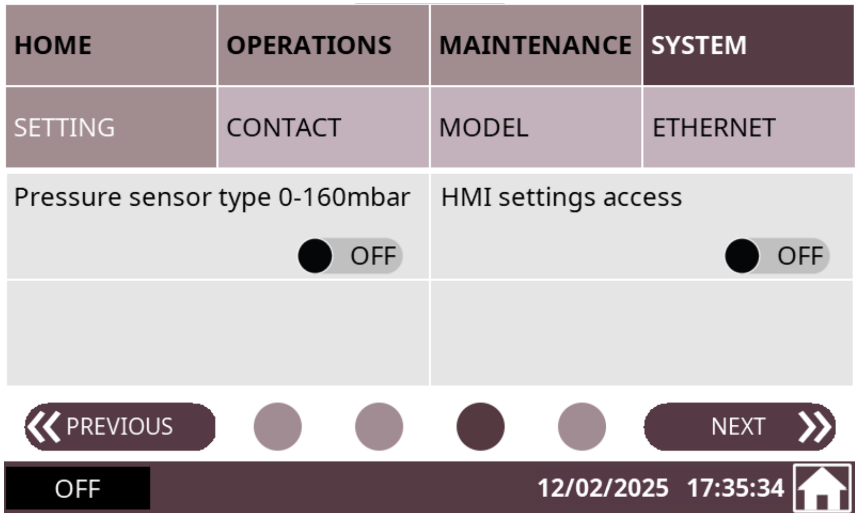

On the third screen/page, it is possible to access the internal settings of the **HMI** by pressing the button for two seconds.

If a pressure sensor is installed, a 0 ... 160 mbar range is displayed:

- Press “ON” to activate the associated function.

Screen/Page SETTING 4

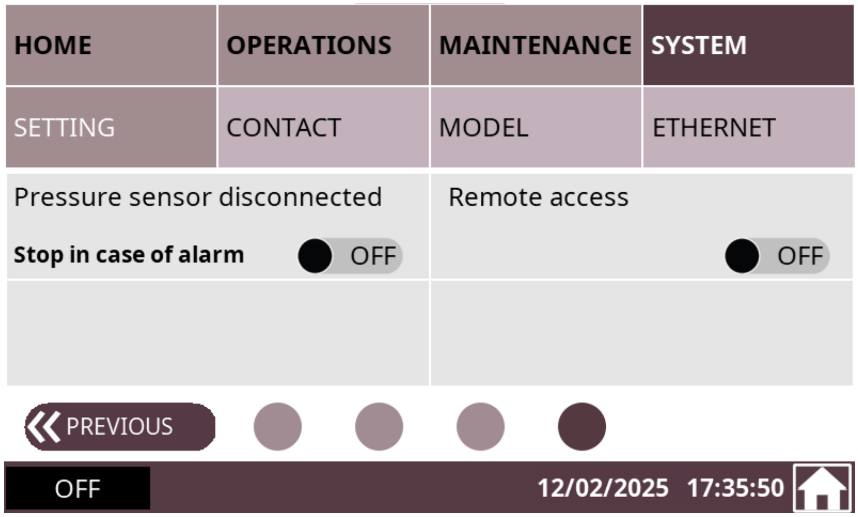

On the fourth screen/page, it is possible to activate/deactivate the **pressure sensor disconnection** alarm.

The **Remote access** function allows to take remote control of the HMI using the VNC protocol:

- The VNC protocol is a protocol for remote access to HMI interfaces via a LAN connection (HMI RJ45 port). This protocol uses the IP address of the HMI (192.168.0.100 by default), port 5900 and a password (“adm” by default). A remote viewer such as VNC can also be used.
- For more information, contact your Busch representative.

7.1.5.2 Model

Screen/Page MODEL 1

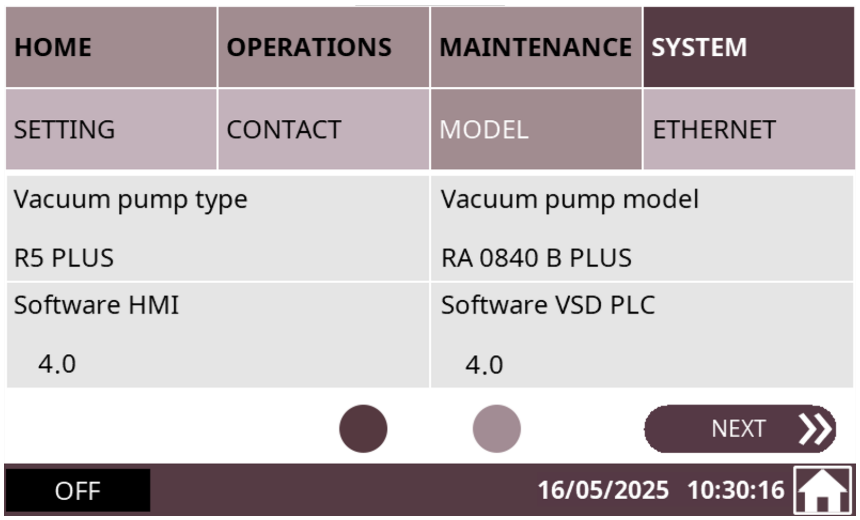

Screen/Page MODEL 2

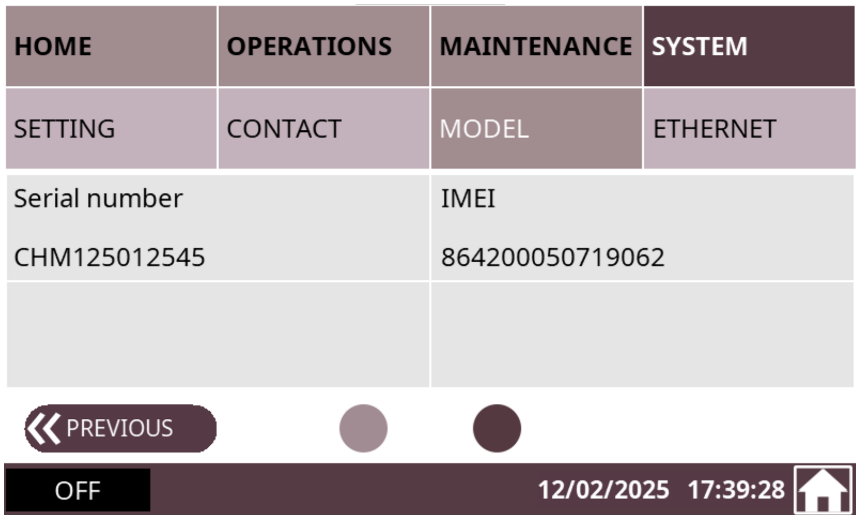

The "SYSTEM > MODEL" display provides the following information.

On screen/page 1:

- Type and model of vacuum pump,
- Version of HMI software,
- Version of the VSD PLC software*, refer to the NOTE below.

On screen/page 2:

- Serial number of the vacuum pump,
- IMEI of the OTTO IoT Box if the vacuum pump is equipped with this option.



NOTE

*** When updating the VSD software, make sure the new version is compatible with the software versions already installed on the machine.**

- For more information, contact your Busch representative.

7.1.5.3 Ethernet Settings

- To configure the ethernet settings according to your network:
  - Go to “SYSTEM” > “ETHERNET”.

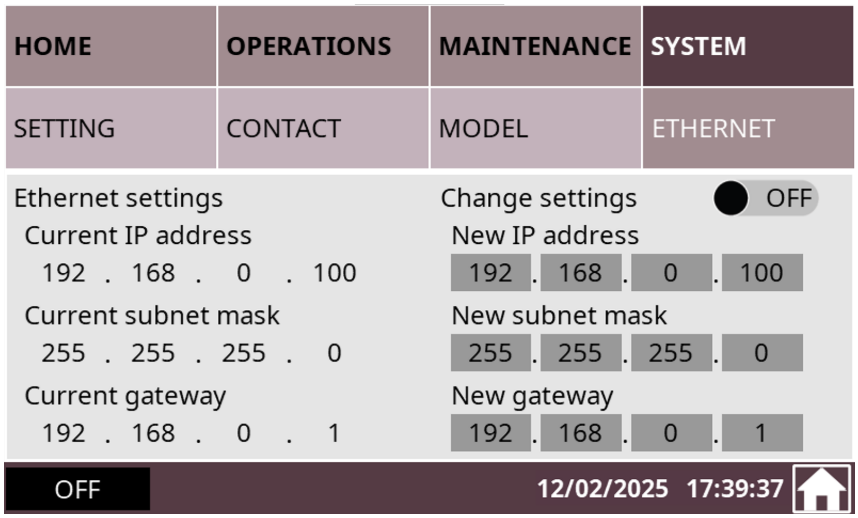

  - Change the values on the right side of the screen (**Change settings**).
  - Press on the switch button to save the new settings.

NOTE

The current Ethernet values are displayed in the left side of the screen (Ethernet settings).

To change these values, it is necessary to fill in all the fields in the right side of the screen (Change settings) before applying the changes by pressing on the switch button:

- New IP address
- New subnet mask
- New gateway

➔ To change the Ethernet settings, it is recommended to connect the vacuum pump with the desired equipment beforehand via the Ethernet port available on the right side of the control cabinet (LAN - see illustration in the chapter “Product Description” of the instruction manual of the vacuum pump).

The default ethernet settings are the following:

Description	Default value
IP address	192.168.0.100
Subnet mask	255.255.255.0
Gateway	192.168.0.1
Port no.	502 (cannot be changed)
Slave ID no.	1-255 (all are functioning)

For more information:

- See *Modbus Control and Ethernet Settings (Optional)* [➔ 34].

7.2 Conveying Condensable Vapors



CAUTION

In operation, the surface of the inlet and exhaust connections may reach temperatures over 70°C.

Risk of burns!

- Avoid contact with these surfaces during and directly after operation.



CAUTION

Venting the machine.

The discharged gases and/or liquids may reach temperatures above 70°C!

Risk of burns!

- Avoid direct contact with the flow of gases and/or liquids.

CAUTION



Noise of running machine.

Risk of damage to hearing!

If people are present in the vicinity of a machine that is not insulated from noise for extended periods of time:

- Make sure to wear hearing protection.

Water vapor within the gas flow is tolerated within certain limits. The conveyance of other vapors shall be agreed upon with the manufacturer.

If condensable vapors are to be conveyed:

START

- Close the isolation valve (optional)
- Warm up the machine (WARM-UP MODE)
- Wait 30 minutes or wait for the temperature to reach 80°C
- Open the isolation valve and perform the process
- Close the isolation valve
- Cool-down the machine (COOL-DOWN MODE)
- Wait 30 minutes

END

For more information on the settings, see *Operation Parameters* [➔ 43].

8 Maintenance



DANGER

Live wires.

Risk of electrical shock!

- Electrical installation work must only be executed by qualified personnel.



DANGER

Maintenance work without disconnecting the variable speed drive.

Risk of electrical shock!

- Disconnect and isolate the variable speed drive before attempting any work on it.
  High voltages are present at the terminals and within the variable speed drive for up to 10 minutes after disconnecting the electrical supply.
- Always ensure, by using a suitable two-pole voltage tester, that no voltage is present on any drive power terminals before starting any work.



DANGER

Live wires. Carry out any work on the variable speed drive and motor.

Risk of electrical shock!

- Electrical installation work must only be executed by qualified personnel.





WARNING



The machine is contaminated with hazardous material.

Risk of poisoning!

Risk of infection!

If the machine is contaminated with hazardous material:

- Wear appropriate personal protective equipment.



CAUTION

Hot surface.

Risk of burns!

- Before doing anything that requires touching the machine, let it cool down first.



CAUTION

Hot liquids.

Risk of burns!

- Before draining liquids, let the machine cool down first.

CAUTION

Failing to properly maintain the machine.

Risk of injuries!

Risk of premature failure and loss of efficiency!

- Maintenance work must only be executed by qualified personnel.
- Respect the maintenance intervals or ask your Busch representative for service.

NOTICE

Using inappropriate cleaners.

Risk of removing safety stickers and protective paint!

- Do not use incompatible solvents to clean the machine.

- Stop the machine and lock it to prevent accidental start-up.

Version with water-oil heat exchanger:

- Close the water supply.

- Vent the connected lines to atmospheric pressure.

If necessary:

- Disconnect all connections.

8.1 Maintenance Schedule

The maintenance intervals depend very much on the individual operating conditions. The intervals given below are considered as starting values which should be individually shortened or extended as appropriate.

Particularly harsh applications or heavy-duty operation, such as high dust loads in the environment or in the process gas, other contamination or ingress of process material, can make it necessary to shorten the maintenance intervals significantly.

Maintenance work	Interval for normal application	Interval for harsh application
• Check the oil level, see *Oil Level Inspection* [➔ 56].	Weekly	Weekly
• Check the machine for oil leaks. In case of leaks, have the machine repaired (contact Busch). If an inlet filter is installed: • Check the inlet filter cartridge, clean or replace if necessary.	Monthly	Monthly

Maintenance work	Interval for normal application	Interval for harsh application
• Change the oil*, the oil filter* (OF) and the exhaust filters (EF). See *Oil and Oil Filter Change* [➔ 56] and *Exhaust Filter Change* [➔ 58].	Max. after 4000 hours or after 1 year	Max. after 2000 hours or after 6 months
Machine with cabinet: • Clean the machine from dust and dirt, especially the cooling air inlet and outlet (CAI/CAO), see *Machine Cleaning* [➔ 62]. **Machine without cabinet:** • Clean the machine from dust and dirt, especially the air-oil heat exchanger (AHE), see *Air Heat Exchanger Cleaning* [➔ 61]. **Water-cooled machine:** • Check the water filter (WF), clean if necessary. **Air-cooled machine:** • Clean the cooling air inlet and outlet (CAI/CAO), see *Machine Cleaning* [➔ 62]. **All machines:** • If an inlet filter is installed, check the inlet filter cartridge, clean or replace if necessary. • Check and clean the filters of the inlet/outlet ventilation grids (VG) of the Control Unit (CU) cabinet, see *Troubleshooting* [➔ 66]. Change them if necessary, see *Spare Parts* [➔ 65].	Every 6 months	Every 6 months
• Check the electrical connections and the monitoring devices.	Every year	Every year
• Contact Busch for an inspection. If necessary, overhaul the machine.	Every 5 years	Every 5 years

Motor Bearings

• Regrease motor bearings (if the motor requires periodic re-greasing)	Refer to the motor name plate for interval and grease type.

* Service interval for synthetic oil, shorten the interval when using mineral oil, contact Busch Service

- For more information about service intervals and remaining hours in the user interface (HMI), see *Maintenance* [➔ 47] in the chapter *Description of User Interface Functions* [➔ 36].

8.2 Oil Level Inspection

NOTE

R5 RA 0840 B PLUS with cabinet.

Oil level inspection without removing the panel.

- Check the oil level through the hole in the front panel.

If the oil level is too low, an alarm signal will be sent by the monitoring system.

- Stop the machine.
- Wait 1 minute.
- Check the oil level.

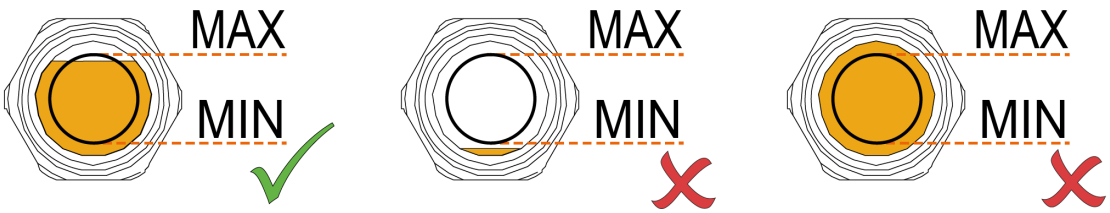

- Fill up if necessary, see *Filling Oil* [➔ 28].

8.3 Oil and Oil Filter Change

NOTICE

Use of inappropriate oil.

Risk of premature failure!

Loss of efficiency!

- Use only a type of oil previously approved and recommended by the manufacturer.

NOTICE

Replace mineral oil with synthetic oil (or vice versa).

Risk of using deteriorated oil!

Risk of premature failure!

By default, the oil temperature thresholds (warning/alarm) and the service intervals are configured based on the oil type (mineral or synthetic) indicated on the name plate (NP).

In case of change of oil type:

- Contact your Busch representative to adjust the thresholds and service intervals accordingly.

NOTE

Machine with cabinet.

To find out which panel should be removed for this operation:

- See chapter *Cabinet Panels* [➔ 22].

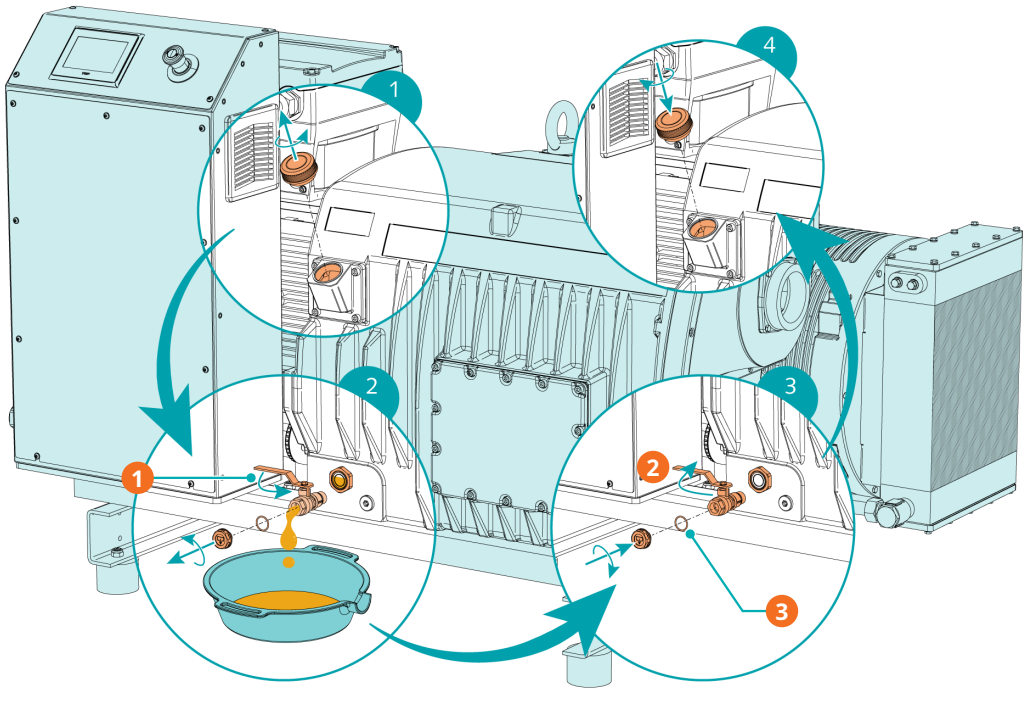

Description			
1	Open the oil drain valve (ODV)	2	Close the oil drain valve (ODV)
3	1x o-ring, article no. 0486 000 505	*	Same procedure for the machine with cabinet

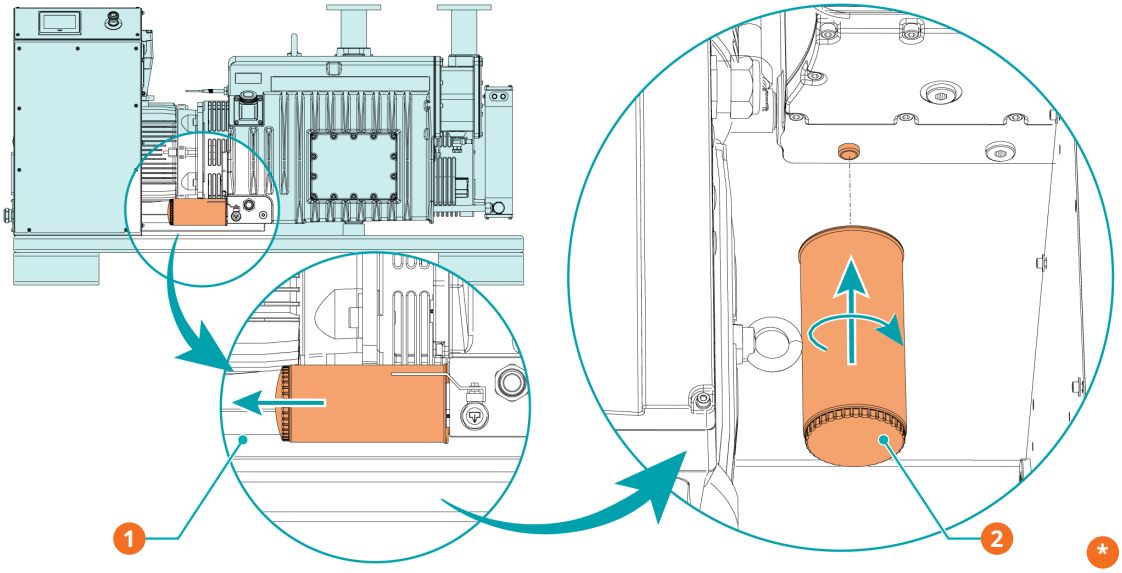

Description			
1	Unscrew the oil filter. If necessary use an oil filter wrench.	2	Replace with a new oil filter (OF), article no. 0531 000 005
*	Same procedure for the machine without cabinet		

- For information on oil type and filling capacities, see the *Technical Data* [➔ 69] and *Oil* [➔ 70] chapters.

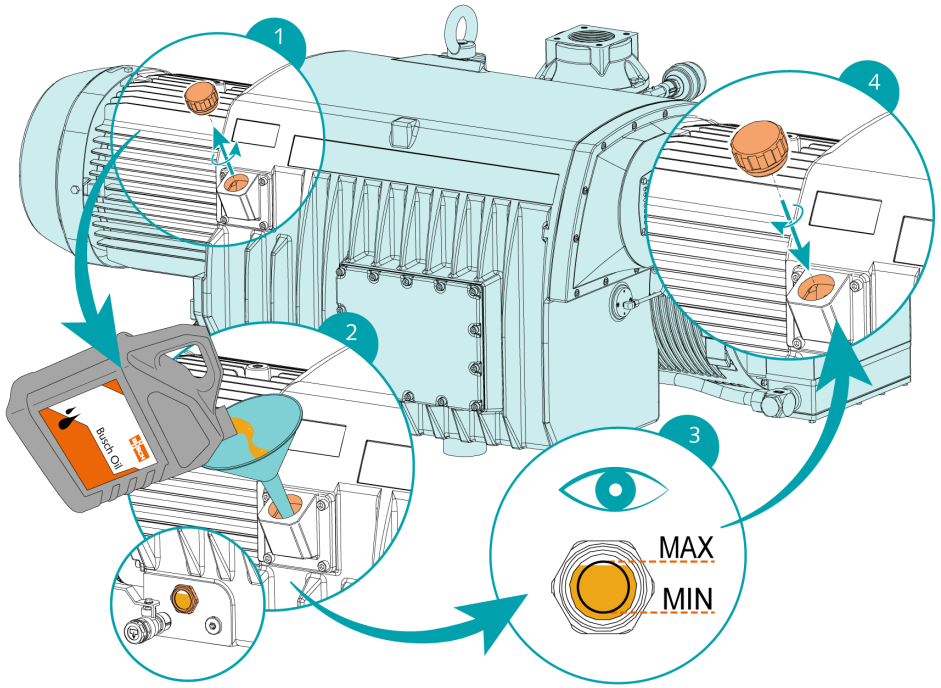

8.4 Exhaust Filter Change

NOTE

Machine with cabinet.

To find out which panel should be removed for this operation:

- See chapter *Cabinet Panels* [➔ 22].

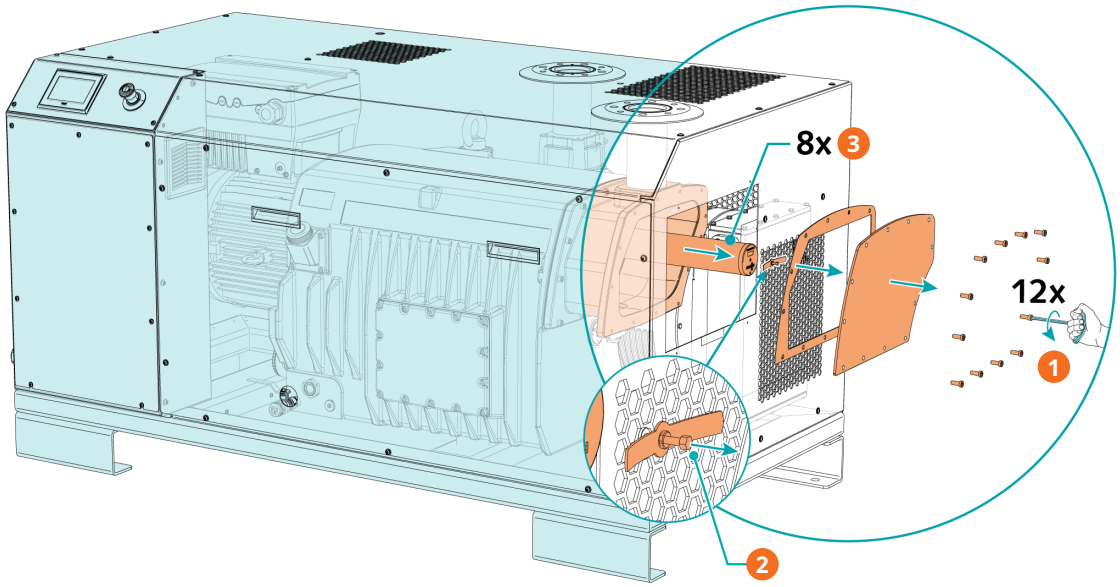

Description			
1	Unscrew 12x (6 mm hex key)	2	Exhaust filter spring
3	8x exhaust filter (EF)		

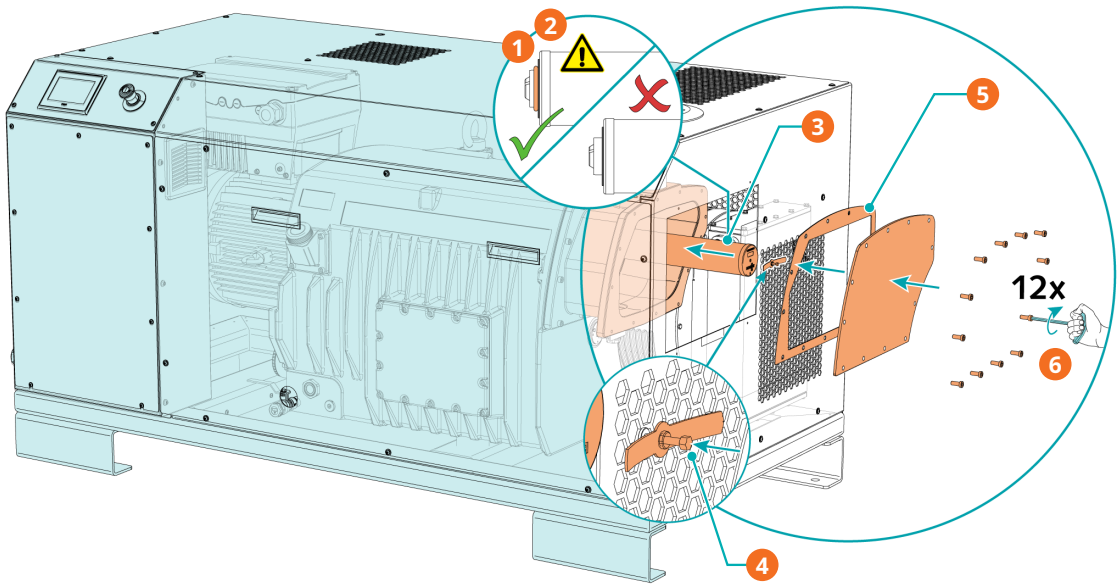

Description			
1	8x exhaust filter (EF), see "Service kit" (chapter Spare Parts - Busch genuine spare part)	2	Make sure the O-ring is in place before refitting each exhaust filter
3	Install the filter the right way up, with the Busch logo facing upwards	4	Exhaust filter spring
5	1x flat gasket, see "Service kit" (chapter Spare Parts)	6	Screw 12x (6 mm hex key) / Tightening torque: 21 Nm

Exhaust filter change - RA 0840 B PLUS without cabinet

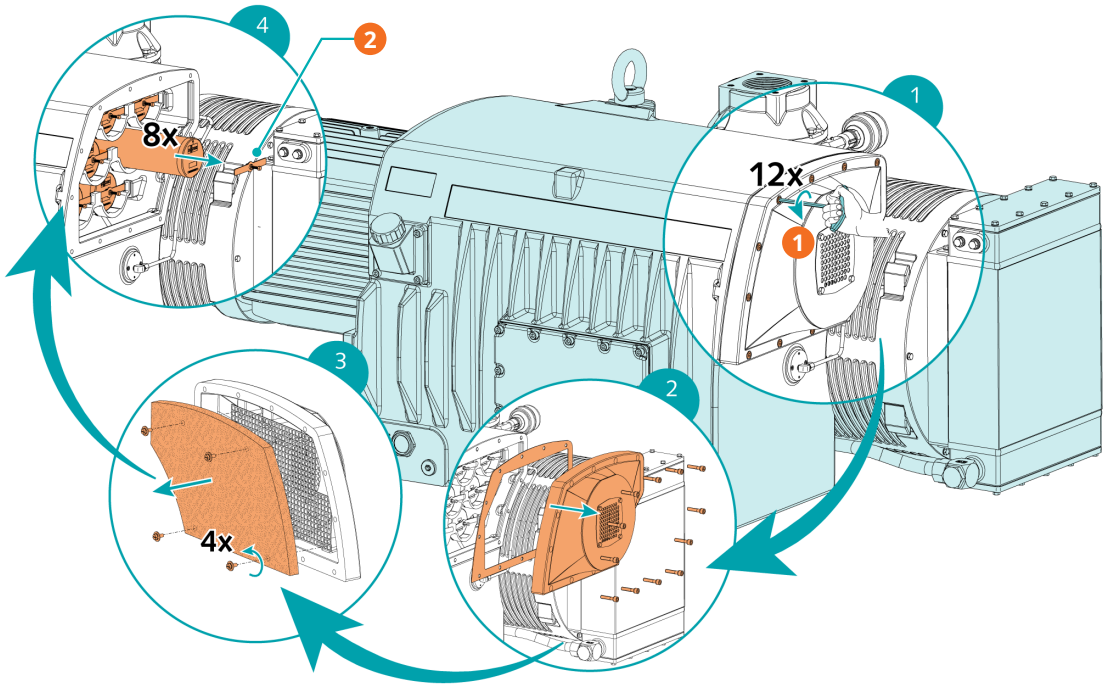

Description			
1	Unscrew 12x (6 mm hex key)	2	8x exhaust filter (EF) + spring

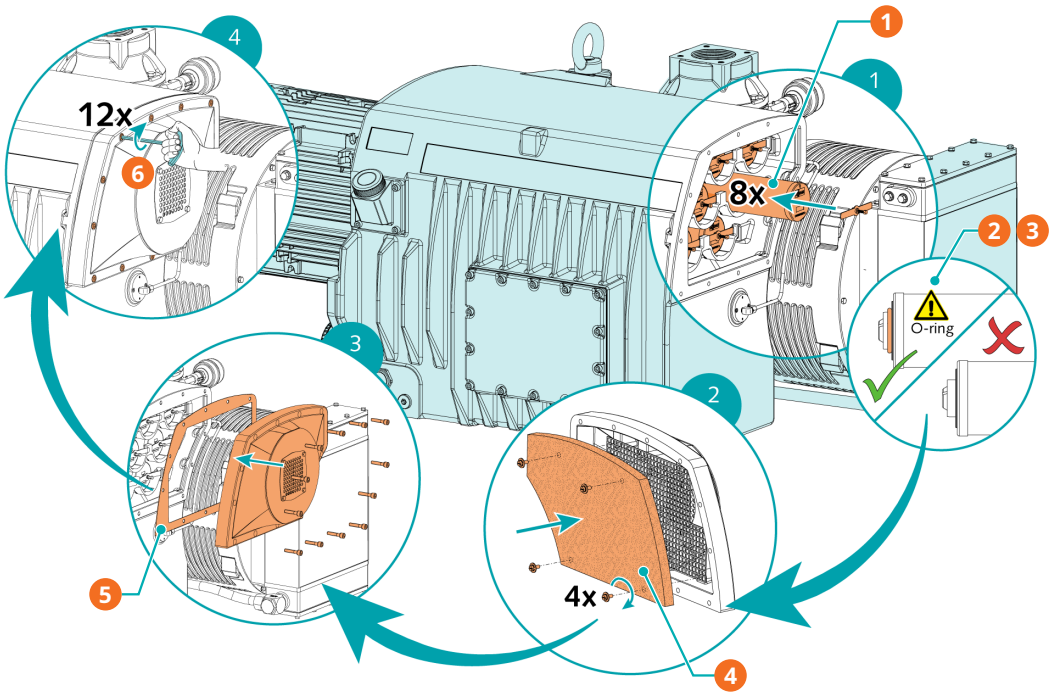

Description			
1	8x exhaust filter (EF), see "Service kit" (chapter Spare Parts - Busch genuine spare part)	2	Make sure the O-ring is in place before refitting each exhaust filter
3	Install the filter the right way up, with the Busch logo facing upwards	4	1x filter material (FM), see "Service kit" (chapter Spare Parts)
5	1x flat gasket, see "Service kit" (chapter Spare Parts)	6	Screw 12x (6 mm hex key) / Tightening torque: 21 Nm

8.5 Air Heat Exchanger Cleaning

NOTE

Machine with cabinet.

To find out which panel should be removed for this operation:

- See chapter *Cabinet Panels* [➔ 22].

- Use compressed air and wear protective eyewear and mask.

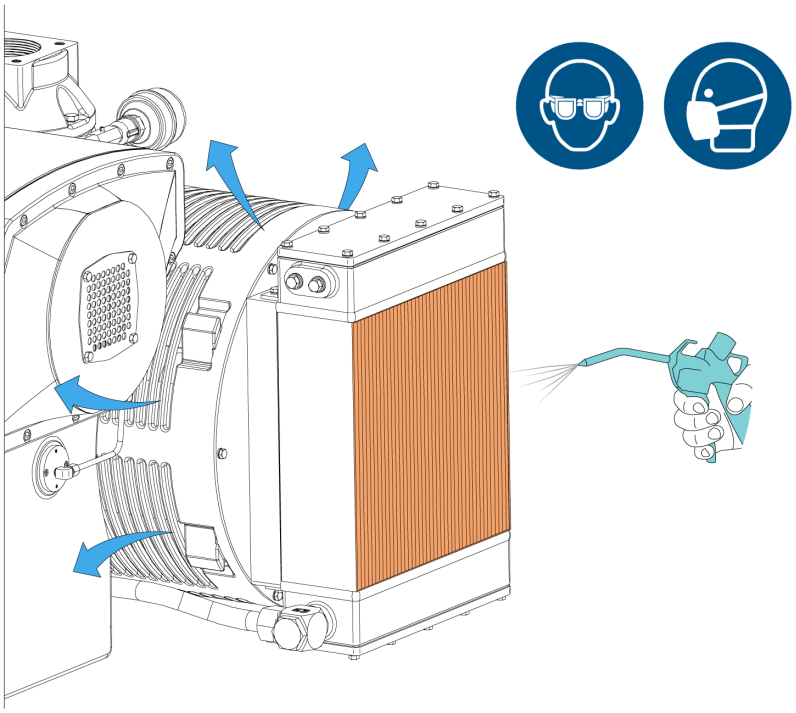

8.6 Machine Cleaning

- For machine with cabinet.
- Clean the cooling air inlet and outlet (CAI/CAO) with compressed air, especially when the machine is in a dusty environment.
- Remove covers/panels if necessary.

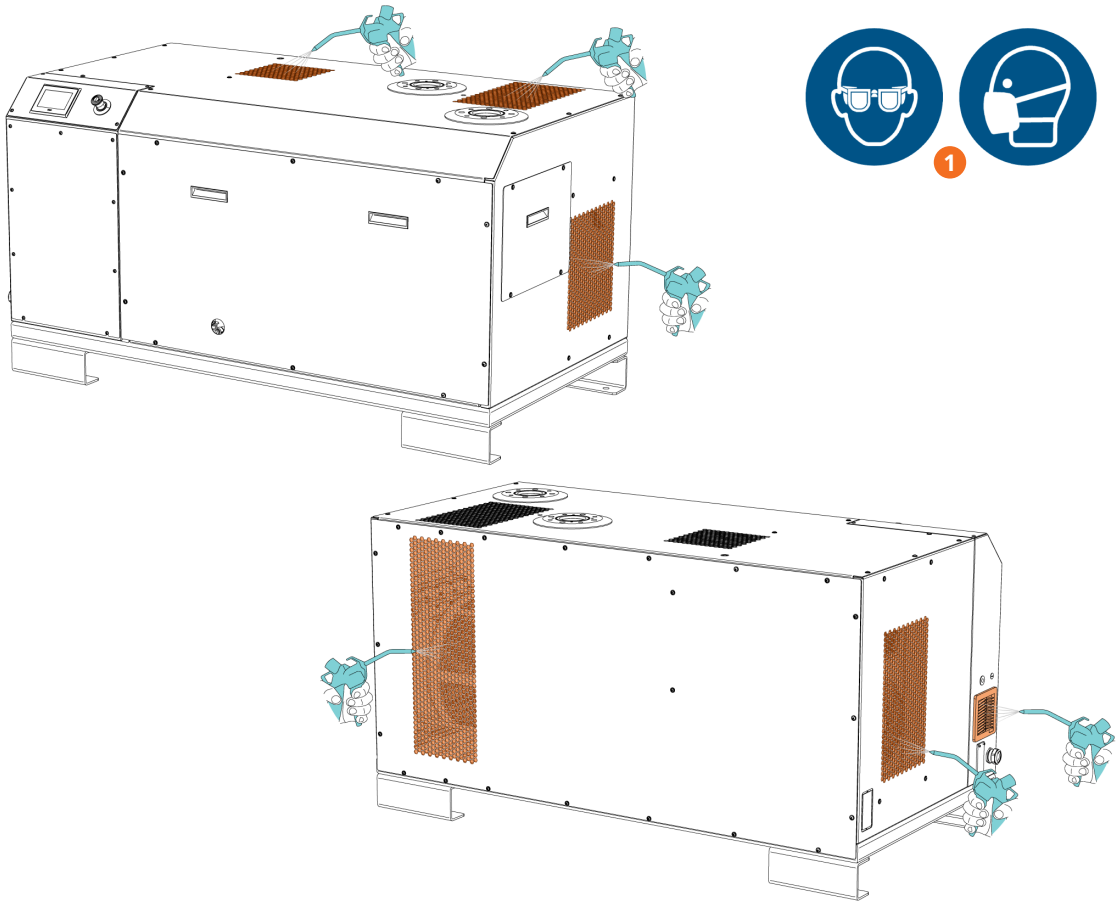

Description			
1	Use compressed air and wear protective eyewear and mask		

9 Overhaul





WARNING



The machine is contaminated with hazardous material.

Risk of poisoning!

Risk of infection!

If the machine is contaminated with hazardous material:

- Wear appropriate personal protective equipment.

NOTICE

Incorrect assembly.

Risk of premature failure!

Loss of efficiency!

- Any disassembly of the machine beyond that described in this manual must be carried out by technicians approved by Busch.

If the machine has conveyed gas contaminated with foreign materials which are hazardous to health:

- Decontaminate the machine as much as possible and state the contamination status in a ‘Declaration of Contamination’.

The manufacturer will only accept machine accompanied by a signed, fully completed and legally binding "declaration of contamination", downloadable from the following link: *buschvacuum.com/declaration-of-contamination*.

10 Decommissioning



DANGER

Live wires.

Risk of electrical shock!

- Electrical installation work must only be executed by qualified personnel.



CAUTION

Hot surface.

Risk of burns!

- Before doing anything that requires touching the machine, let it cool down first.



CAUTION

Hot liquids.

Risk of burns!

- Before draining liquids, let the machine cool down first.

- Stop the machine and lock it to prevent accidental start-up.
- Disconnect the power supply.

Version with water-oil heat exchanger:

- Close the water supply.
- Disconnect the water supply.
- Drain the cooling water.

- Vent the connected lines to atmospheric pressure.
- Disconnect all connections.

If the machine is to be stored:

- See *Storage* [➔ 19].

10.1 Dismantling and Disposal

- Drain and collect the oil.
- Make sure that no oil drips onto the floor.
- Remove the exhaust filters.
- Remove the oil filter.
- Separate special waste from the machine.
- Dispose of special waste in compliance with applicable regulations.
- Dispose of the machine as scrap metal.

11 Spare Parts

NOTICE

Use of non-Busch genuine spare parts.

Risk of premature failure!

Loss of efficiency!

- Use only Busch genuine spare parts, consumables and supplies to ensure correct operation of the machine and to validate the warranty.

Spare part	Description	Article number
Service kit	Includes all parts to perform maintenance work (RA 0840 B PLUS with cabinet)	2000 285 394
Service kit	Includes all parts to perform maintenance work (RA 0840 B PLUS without cabinet)	0992 568 271
Service kit for PLUS Control Unit	Includes the filters for the ventilation grids of the PLUS Control Unit (CU)	0992 241 181

If other parts are required:

- Contact your Busch representative.

12 Troubleshooting



DANGER

Live wires.

Risk of electrical shock!

- Electrical installation work must only be executed by qualified personnel.



DANGER

Carry out any work on the control unit and motor.

Risk of electrical shock!

- Electrical installation work must only be executed by qualified personnel.



CAUTION

Hot surface.

Risk of burns!

- Before doing anything that requires touching the machine, let it cool down first.



CAUTION

Hot liquids.

Risk of burns!

- Before draining liquids, let the machine cool down first.

NOTICE

Variable speed drive maintenance.

Risk of damage to the variable speed drive!

- Maintenance and adjustment must only be executed by qualified personnel.

HMI Troubleshooting Table

Problem	Possible Cause	Remedy
Alarm buzzer is on.	Alarm from monitoring sensors or electric drive.	• Check details of the alarm on the HMI Touch Screen (buttons “Current alarm” and “History alarm”, click on the highlighted alarm for more details).
Alarm cannot be acknowledged.	Alarm not identified.	• Perform a “Hard-reset” by switching off the machine's power supply - the alarm will be deleted.

Problem	Possible Cause	Remedy
The machine does not start.	The machine is not supplied with the correct voltage.	• Check the power supply.
	The rotors are jammed or seized.	• Inspect the rotors or repair the machine (Contact Busch).
	Solid foreign matter has entered the machine.	• Remove the solid foreign matter or repair the machine (Contact Busch).
	Alarm trip of the monitoring sensors or the variable speed drive.	• Let the machine cool down. • Check the alarm notifications on the HMI Touch Screen.
	The motor is defective.	• Replace the motor.

Machine Troubleshooting Table

Problem	Possible cause	Remedy
The machine does not reach the usual pressure at the inlet connection.	The oil level is too low.	• Top up oil, see *Filling Oil* [➔ 28].
	The inlet screen (IS) is partially clogged.	• Clean the inlet screen (IS).
	The inlet filter cartridge (optional) is partially clogged.	• Replace the inlet filter cartridge.
	Internal parts are worn or damaged.	• Repair the machine (contact Busch).
The machine runs very noisily.	Worn coupling (CPL).	• Replace the coupling (CPL).
	Stuck vanes.	• Repair the machine (Contact Busch).
	Defective bearings.	

The machine runs too hot.	Insufficient cooling.	• Remove dust and dirt from the machine.
		• **Air-cooled vacuum pump:**
		  • Check the heat exchanger (AHE).
		• **Water-cooled vacuum pump:**
		  • Check the water heat exchanger (WHE) and the water filter (WF).

	Ambient temperature is too high.	• Observe the permitted ambient temperature.
	The oil level is too low.	• Top up oil, see *Filling Oil* [➔ 28].
	The exhaust filters (EF) are partially clogged.	• Replace the exhaust filters (EF), see *Exhaust Filter Change* [➔ 58].

The machine fumes or expels oil droplets through the exhaust gases.	The exhaust filters (EF) are partially clogged.	• Replace the exhaust filters (EF).
	An exhaust filter (EF) with o-ring is not fitted properly.	• Ensure the correct position of the exhaust filters (EF) and the o-rings.
	The float valve (FV) does not work properly.	• Check the float valve and the oil return line, repair if necessary (Contact Busch).
Abnormal oil consumption.	Oil leaks.	• Replace seals (contact Busch).
	The float valve (FV) does not work properly.	• Check float valve and the oil return line, repair it if necessary (contact Busch).
	The machine runs at atmospheric pressure for a long period.	• Make sure that the machine operates under vacuum.
The oil is black.	Oil change intervals are too long.	• Flush the machine (contact Busch).
	The inlet filter (optional) is defective.	• Replace the inlet filter.
	The machine runs too hot.	• See problem "The machine runs too hot".
The oil is emulsified.	The machine has sucked in liquids or large amounts of steam/vapor.	• Flush the machine (contact Busch). • Clean the filter of the gas-ballast valve (GB). • Change the operating mode (see chapter Conveying Condensable Vapors).
The power consumption of the machine has increased.	The exhaust filters (EF) are partially clogged.	• Replace the exhaust filters (EF).
	The oil level is too high.	• Drain excess oil to correct the oil level.
	Oil change intervals are too long.	• Flush the machine (Contact Busch).
The machine cannot be controlled via the user interface (HMI).	The machine is in “Automatic” or “Remote” control mode.	• Switch the control mode to “Local / Manual”

For resolution of problems not listed in the troubleshooting table, contact your Busch representative.

13 Technical Data

		RA 0840 B PLUS	
Nominal pumping speed (min./max. speed)	m^3/h	390 – 840	
Ultimate pressure with closed gas-ballast valve	hPa (mbar) abs.	0.1	
Nominal motor rating	kW	18.5	
Permitted motor speed	min^{-1}	700 – 1400 (factory setting ▶ speed control mode at max. speed)	
Power supply frequency	Hz	50 / 60	
Power supply voltage (50/60 Hz)	V (+/-10%)	3L+PE 380-440V [1] 3L+PE 380-460V [2]	
Circuit breaker (MCCB) *	A	50 (SCCR 10kA)	
Power consumption at 100 mbar (min./max. speed)	kW	8.2 – 14.5	
Power consumption at ultimate pressure (min./max. speed)	kW	4.4 – 9.3	
Sound pressure level (ISO 2151) KpA = 3 dB	dB(A)	< 77	
Water vapor tolerance max. with gas-ballast valve	hPa (mbar)	40.0	
Water vapor capacity with gas-ballast valve	kg/h	22.0 [3]	
Maximum allowable gas inlet temperature according to the inlet pressure	°C	≤ 50 hPa (mbar) abs. : 150	
		> 50 hPa (mbar) abs. : 80	
Ambient temperature (air-cooled vacuum pump)	°C	Mineral oil: 5 ... 30 Synthetic oil: 5 ... 40	
Ambient temperature (water-cooled vacuum pump) **	°C	5 ... 40	
Ambient pressure		Atmospheric pressure	
Relative humidity	at 30°C	80 %	
Oil capacity	l	15	
Dimensions (L x W x H)	mm	1830 x 932 x 981 [4]	
		1680 x 867 x 1025 [5]	
Weight approx.	kg	1000 [4]	800 [5]

[1] Standard Control Unit (IEC); [2] Optional UL Control Unit with lockable main switch; [3] Value at maximum speed; [4] Machine version with cabinet; [5] Machine version without cabinet





WARNING

*** Circuit breaker (MCCB)**

Not included in the scope of delivery!

- Line protection must be provided at the customer's site.
- For voltages above 460V, contact your Busch representative.

NOTE

**** For more information on cooling liquid requirements, refer to chapter *Cooling Water Connection (Optional)* [➔ 24].**

14 Oil

Name	ISO-VG	Oil type	1 L packing	5 L packing	10 L packing	20 L packing
VM 100	100	Mineral	0831 000 060	0831 000 059	-	0831 166 905
VSB 100	100	Synthetic	0831 168 351	0831 168 352	-	0831 168 353
VSC 100	100	Synthetic	0831 168 356	0831 168 357	-	0831 168 359

In case of unfavorable ambient temperature, other oil viscosities can be used.

- For more information, contact your Busch representative.

To find out which oil needs to be filled into the machine, refer to the name plate (NP).

Oil suitability

- **Oil VM 100**: Standard oil for operating temperatures <90°C.
- **Oil VSB 100**: Suitable for food applications (H1); heavy duty cycle operation.
  - Compliant with kosher and halal standards.
- **Oil VSC 100**: Suitable for harsh applications.

15 EU Declaration of Conformity

This Declaration of Conformity and the CE-markings affixed to the name plate are valid for the machine within the Busch scope of delivery. This Declaration of Conformity is issued under the sole responsibility of the manufacturer.

When this machine is integrated into a superordinate machinery, the manufacturer of the superordinate machinery (this can be the operating company, too) must conduct the conformity assessment process for the superordinate machine or plant, issue the Declaration of Conformity for it and affix the CE-marking.

The manufacturer

Ateliers Busch S.A.
Zone Industrielle
CH-2906 Chevenez

declares that the machine: vacuum pump R5 RA 0840 B PLUS

fulfill(s) all the relevant provisions from EU directives or regulations:

- 'Machinery Directive' 2006/42/EC, if the serial number is less than or equal to CHM127029999 (until January 19, 2027).
- 'Machinery Regulation' (EU) 2023/1230, if the serial number is greater than or equal to CHM127030000 (from January 20, 2027). The conformity assessment has been carried out according to internal production control procedure (Module A), in accordance with the requirements of the 'Machinery Regulation'.
- 'Electromagnetic Compatibility' (EMC) 2014/30/EU
- 'RoHS' 2011/65/EU Restriction of the use of certain hazardous substances in electrical and electronic equipment (incl. all related applicable amendments)
- 'Cyber Resilience Act' [1)], Regulation (EU) 2024/2847, if the serial number is greater than or equal to CHM127480000 (from December 11, 2027). The conformity assessment has been carried out according to internal production control procedure (Module A), in accordance with the requirements of the 'Cyber Resilience Act'.

and comply(-ies) with the following harmonized standards, common specifications or other technical specifications:

Standard	Title of the Standard
EN ISO 12100 : 2010	Safety of machinery - Basic concepts, general principles of design
EN 1012-2 : 1996 + A1 : 2009	Vacuum pumps - Safety requirements - Part 2
EN 60204-1 : 2018	Safety of machinery - Electrical equipment of machines - Part 1: General requirements
EN ISO 13857 : 2019	Safety of machinery - Safety distances to prevent hazard zones being reached by the upper and lower limbs
EN ISO 2151 : 2008	Acoustics - Noise test code for compressors and vacuum pumps - Engineering method (grade 2)
EN IEC 63000 : 2018	Technical documentation for the assessment of electrical and electronic products with respect to the restriction of hazardous substances
EN IEC 61000-6-2 : 2019	Electromagnetic compatibility (EMC) - Generic standards. Immunity for industrial environments
EN IEC 61000-6-4 : 2019	Electromagnetic compatibility (EMC) - Generic standards. Emission standard for industrial environments
EN IEC 62443-3-3 : 2019	Industrial communication networks - Network and system security - Part 3-3: System security requirements and security levels

Legal person authorized to compile the technical file and authorized representative in the EU (if the manufacturer is not located in the EU):
Busch Dienste GmbH, Schauinslandstr. 1, DE-79689 Maulburg

Chevenez, 2026.10.01



Christian Hoffmann, General Manager

Ateliers Busch S.A.

[1)] The **'Cyber Resilience Act'** regulation is applicable if the machine is delivered ex-factory with digital elements containing programmable or digital functions, such as a control box, a VSD (Variable Speed Drive), an OTTO IoT Box, a Busch PLC (Programmable Logic Controller) ...

16 UK Declaration of Conformity

This Declaration of Conformity and the UKCA-markings affixed to the name plate are valid for the machine within the Busch scope of delivery. This Declaration of Conformity is issued under the sole responsibility of the manufacturer.

When this machine is integrated into a superordinate machinery, the manufacturer of the superordinate machinery (this can be the operating company, too) must conduct the conformity assessment process for the superordinate machine or plant, issue the Declaration of Conformity for it and affix the UKCA-marking.

The manufacturer

Ateliers Busch S.A.
Zone Industrielle
CH-2906 Chevenez

declares that the machine: vacuum pump R5 RA 0840 B PLUS

fulfill(s) all the relevant provisions from UK legislations:

- Supply of Machinery (Safety) Regulations 2008
- Electromagnetic Compatibility Regulations 2016
- Restriction of the use of certain hazardous substances in Electrical and Electronic Equipment Regulations 2012

and comply(-ies) with the following designated standards, common specifications or other technical specifications:

Standard	Title of the Standard
EN ISO 12100 : 2010	Safety of machinery - Basic concepts, general principles of design
EN 1012-2 : 1996 + A1 : 2009	Vacuum pumps - Safety requirements - Part 2
EN 60204-1 : 2018	Safety of machinery - Electrical equipment of machines - Part 1: General requirements
EN ISO 13857 : 2019	Safety of machinery - Safety distances to prevent hazard zones being reached by the upper and lower limbs
EN ISO 2151 : 2008	Acoustics - Noise test code for compressors and vacuum pumps - Engineering method (grade 2)
EN IEC 63000 : 2018	Technical documentation for the assessment of electrical and electronic products with respect to the restriction of hazardous substances
EN IEC 61000-6-2 : 2019	Electromagnetic compatibility (EMC) - Generic standards. Immunity for industrial environments
EN IEC 61000-6-4 : 2019	Electromagnetic compatibility (EMC) - Generic standards. Emission standard for industrial environments
EN IEC 62443-3-3 : 2019	Industrial communication networks - Network and system security - Part 3-3: System security requirements and security levels

Legal person authorized to compile the technical file and importer in the UK (if the manufacturer is not located in the UK):
Busch (UK) Ltd, 30 Hortonwood, Telford – UK

Chevenez, 2026.10.01



Christian Hoffmann, General Manager

Ateliers Busch S.A.

Notes

BUSCH GROUP

The Busch Group is one of the world's largest manufacturers of vacuum pumps, vacuum systems, blowers, compressors and gas abatement systems. Under its umbrella, the group houses two well-known brands: Busch Vacuum Solutions and Pfeiffer Vacuum+Fab Solutions. Together, they offer solutions to a wide range of industries. A global network of highly competent local teams in 44 countries ensures that expert, tailor-made support is always available near you. Wherever you are. Whatever your business.



- Busch Group companies
- Busch Group production sites
- Busch Group service centers
- Busch Group local representatives

www.buschvacuum.com

www.pfeiffer-vacuum.com

2000280535 | A0_en-US