VACUUM SOLUTIONS

Part of the BUSCH GROUP

R5

Oil-Lubricated Rotary Vane Vacuum Pumps
KB 0025 F, KC 0025 F

Instruction Manual



SERVICE AND SPARE PARTS, INSTRUCTION MANUALS ... WWW.BUSCHVACUUM.COM/SERVICE-CONTACT

VACUUM APP

CE UK CA

0870136887 | B0_en-US | Original instructions

2026/11/17

Table of Contents

1 Safety 3

2 Product Description 4

2.1 Operating Principle 5

2.2 Intended Use 5

2.3 Start Controls 6

2.4 Optional Accessories 6

2.4.1 Gas-Ballast Valve 6

2.4.2 Inlet Filter 6

3 Transport and Handling 7

4 Storage 8

5 Installation 9

5.1 Installation Conditions 9

5.2 Connecting Lines / Pipes 10

5.2.1 Inlet Connection 10

5.2.2 Exhaust 11

5.3 Filling Oil 11

6 Electrical Connection 13

6.1 Machine delivered without Control Box or Variable Speed Drive (VSD) 13

6.2 Wiring Diagram Single-Phase Motor 14

6.3 Wiring Diagram Three-Phase Motor 15

7 Commissioning 16

7.1 Conveying Condensable Vapors 17

8 Maintenance 18

8.1 Maintenance Schedule 19

8.2 Oil Level Inspection 19

8.3 Oil Change 20

8.4 Exhaust Filter Change 21

9 Overhaul 23

10 Decommissioning 24

10.1 Dismantling and Disposal 24

11 Spare Parts 25

12 Troubleshooting 26

13 Technical Data 28

14 Oil 29

15 EU Declaration of Conformity 30

16 UK Declaration of Conformity 31

1 Safety

Prior to handling the machine, this instruction manual should be read and understood. If anything needs to be clarified, contact your manufacturer representative.

Read this instruction manual carefully before use and keep for future reference.

This instruction manual remains valid as long as the customer does not change anything on the product.

Always wear appropriate personal protective equipment in accordance with the local regulations.

The machine has been designed and manufactured in accordance with the state-of-the-art methods. Nevertheless, residual risks may remain, as described in the following chapters and in accordance with the chapter *Intended Use* [➔ 5].

This instruction manual highlights potential hazards where appropriate. Safety notes and warning messages are tagged with one of the keywords DANGER, WARNING, CAUTION, NOTICE and NOTE as follows:



DANGER

... indicates an imminent dangerous situation that will result in death or serious injuries if not prevented.



WARNING

... indicates a potentially dangerous situation that could result in death or serious injuries.



CAUTION

... indicates a potentially dangerous situation that could result in minor injuries.



NOTICE

... indicates a potentially dangerous situation that could result in damage to property.



NOTE

... indicates helpful tips and recommendations, as well as information for efficient and trouble-free operation.

2 Product Description

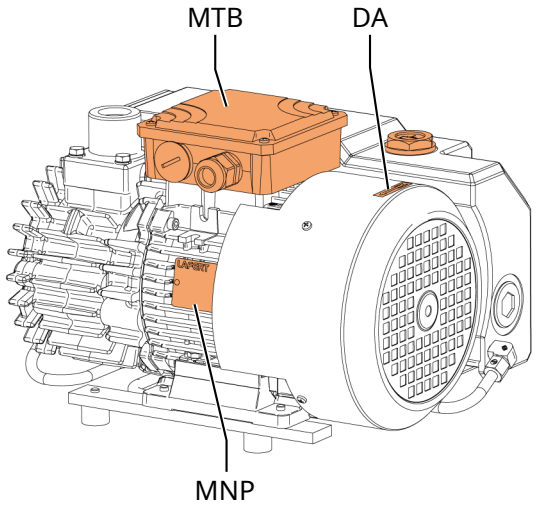

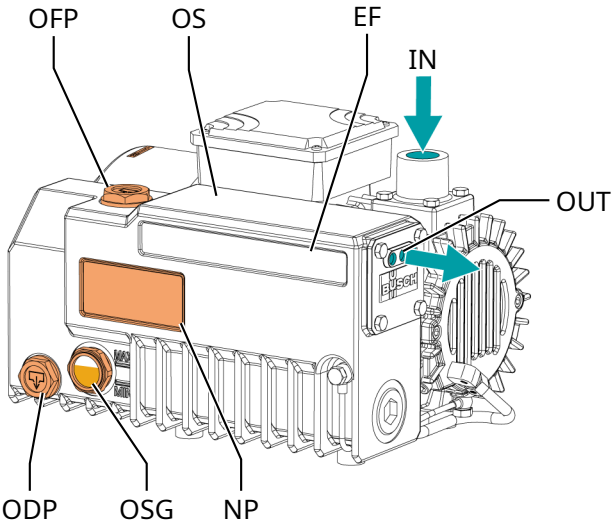

Description			
IN	Inlet connection (Inlet)	OUT	Exhaust (Outlet)
DA	Directional arrow	EF	Exhaust filter
MNP	Motor name plate	MTB	Motor terminal box
NP	Name plate	ODP	Oil drain plug
OFP	Oil fill plug	OS	Oil separator
OSG	Oil sight glass		

NOTE

Technical term.

In this instruction manual, we consider that the term 'machine' refers to the 'vacuum pump'.

NOTE

Illustrations.

In this instruction manual, the illustrations may differ from the appearance of the machine.

2.1 Operating Principle

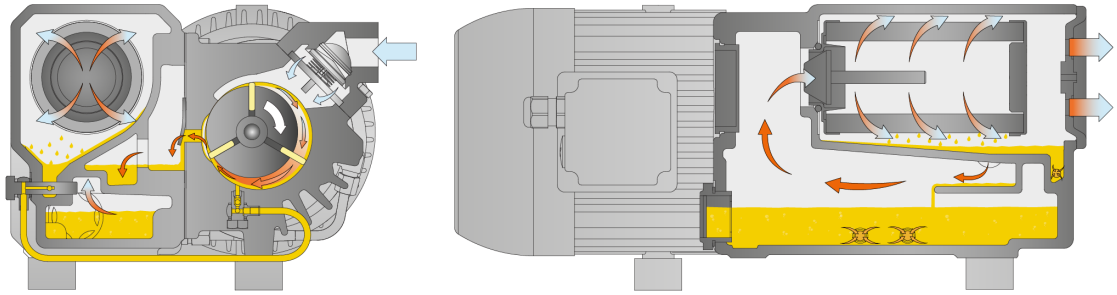

The machine works on the rotary vane principle.

The oil seals the gaps, lubricates the vanes and takes away compression heat.

In order to avoid reverse rotation after switching off, the machine is equipped with a non-return valve (NRV).

In order to avoid solids from entering, the machine is equipped with an inlet screen (IS).

Exhaust filters separate the oil from the exhaust gas.

2.2 Intended Use

WARNING

In case of foreseeable misuse outside the intended use of the machine.

Risk of injuries!

Risk of damage to the machine!

Risk of damage to the environment!

- Make sure to follow all instructions described in this manual.

The machine is intended for the suction of air and other dry, non-aggressive, non-toxic, non-ignitable and non-explosive gases.

NOTE

If the machine is started against vacuum.

The oil temperature must be above 25 °C to ensure reliable and safe start-up.

Conveying of other media leads to an increased thermal and/or mechanical load on the machine and is permissible only after a consultation with the manufacturer.

The machine is intended for placement in a potentially non-explosive environment.

The machine is designed for indoor installations. For outdoor installations, consult your Busch representative for special precautions.

The machine is capable of maintaining ultimate pressure, see *Technical Data* [➔ 28].

Note: The non-return valve (NRV) shouldn't be used as a non-return valve or isolation valve for the system. The non-return valve is only to protect the machine.

If the machine needs to be maintained after shutdown:

Permitted environmental conditions, see *Technical Data* [➔ 28].

2.3 Start Controls

The machine comes without start controls. The control of the machine is to be provided in the course of installation.

The machine can be equipped with a soft-starter.

2.4 Optional Accessories

2.4.1 Gas-Ballast Valve

The gas-ballast valve mixes the process gas with a limited quantity of ambient air to counteract the condensation of vapor inside the machine.

The gas-ballast valve has an influence on the ultimate pressure of the machine, see *Technical Data* [➔ 28].

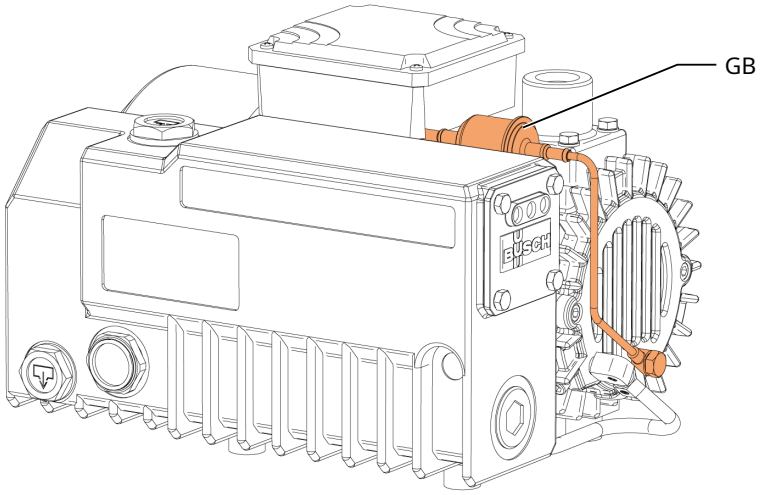

Description			
GB	Gas-ballast valve		

2.4.2 Inlet Filter

The inlet filter protects the machine against dust and other solids in the process gas. The inlet filter is available with a paper or polyester cartridge.

3 Transport and Handling



WARNING

Suspended load.

Risk of severe injury!

- Do not walk, stand, or work under suspended loads.

NOTICE

If the machine is already filled with oil.

Tilting a machine already filled with oil can cause a large amount of oil to ingress into the cylinder. Starting the machine with excessive oil in the cylinder will immediately break the vanes and render it unusable!

- Drain the oil before each transport or always transport the machine horizontally.

- To find out the weight of the machine, refer to the chapter *Technical Data* [➔ 28] or the name plate (NP).

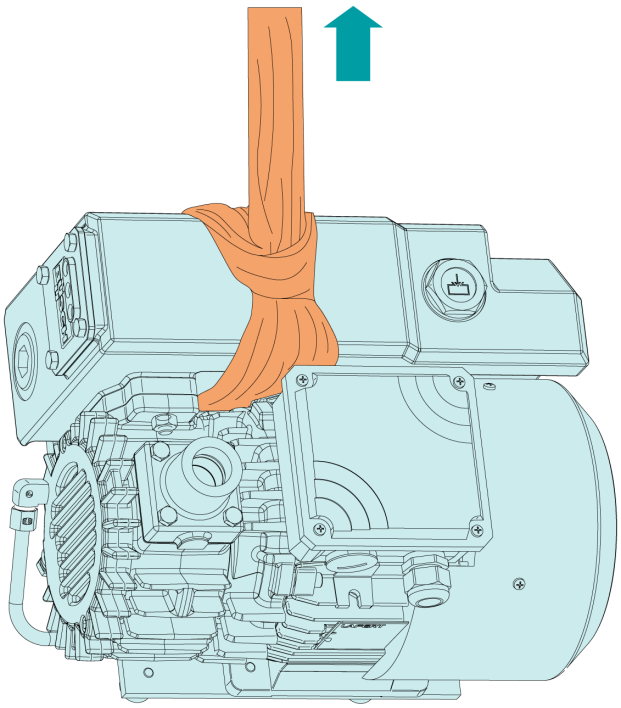

- Check that the machine has not been damaged during transport.

If the machine is mounted and secured on a transport support (pallet):

- Remove the machine from the transport support before installation.

4 Storage

- Seal hermetically all apertures with the caps provided with the machine, or with adhesive tape if the caps are no longer available.
- Store the machine indoors, in a dry place, away from dust and vibrations and if possible, in original packaging, preferably at temperatures between 0 ... 40 °C.

If the machine is to be stored for more than 3 months:

- Seal hermetically all apertures with the caps provided with the machine, or with adhesive tape if the caps are no longer available.
- Wrap the machine in a corrosion inhibitor film.
- Store the machine indoors, in a dry place, away from dust and vibrations and if possible, in original packaging, preferably at temperatures between 0 ... 40 °C.

5 Installation

5.1 Installation Conditions

NOTICE

Use of the machine outside of the permitted installation conditions.

Risk of premature failure!

Loss of efficiency!

- Make sure that the installation conditions are fully respected.

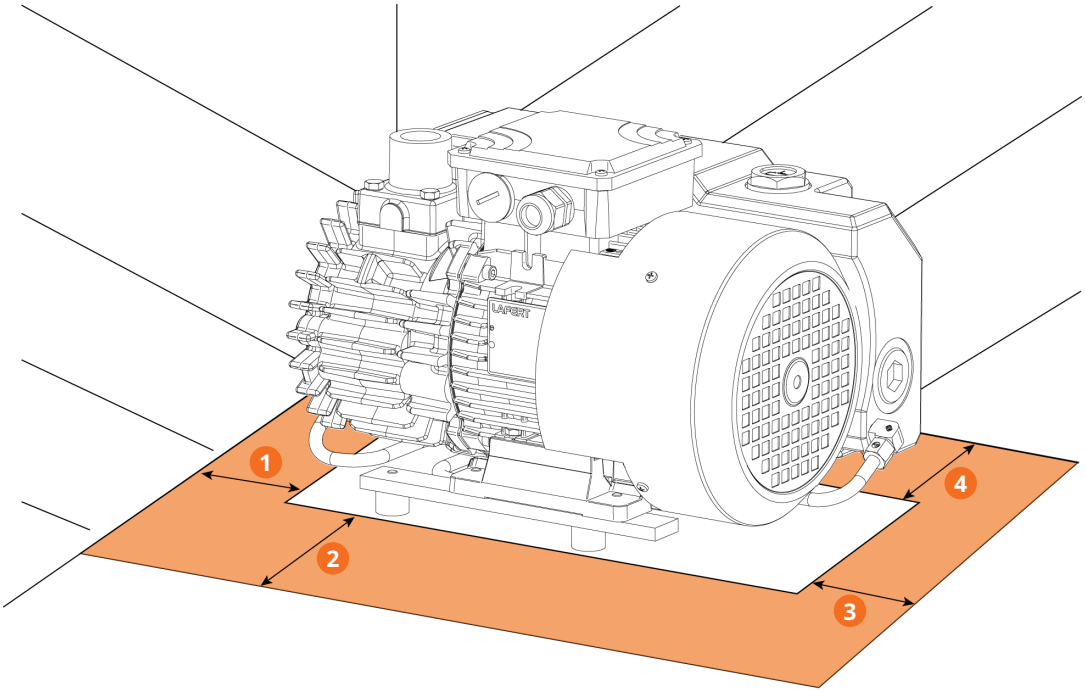

Description			
1	~20 cm	2	~20 cm
3	~20 cm	4	~20 cm

- Make sure that the environment of the machine is not potentially explosive.
- Make sure that the ambient conditions comply with the *Technical Data* [➔ 28].
- Make sure that the environmental conditions comply with the protection class of the motor and the electrical elements.
- Make sure that the installation space or location is protected from weather and lightning.
- Make sure that the installation space or location is vented such that sufficient cooling of the machine is provided.
- Make sure that cooling air inlets and outlets are not covered or obstructed and that the cooling air flow is not affected adversely in any other way.
- Make sure that the oil sight glass (OSG) remains easily visible.
- Make sure that enough space remains for maintenance work.
- Make sure that the machine is installed or mounted horizontally, a maximum deviation of 1° in any direction is acceptable.

- Check the oil level, fill up if necessary, see *Filling Oil* [➔ 11].
- Make sure that all provided covers, guards, hoods, etc. are mounted.
- Make sure that suitable protection against reverse rotation of the machine is provided.

If the machine is installed at an altitude greater than 1000 meters above sea level:

- Contact your manufacturer representative, the motor must be derated or the ambient temperature limited.

5.2 Connecting Lines / Pipes

- Remove all protective covers before installation.
- Make sure that the connecting lines cause no stress on the connections of the machine. Therefore, we recommend installing flexible lines at the inlet connection (IN).
- Make sure that the diameter of the connecting lines over the entire length is at least as large as the connections of the machine.

In case of long connecting lines:

- Use larger diameters to avoid a loss of efficiency.
- Contact your manufacturer representative for more information.

5.2.1 Inlet Connection



WARNING

Unprotected inlet connection.

Risk of severe injury!

- Do not put hand or fingers in the inlet connection.

NOTICE

Ingress of foreign objects or liquids.

Risk of damage to the machine!

If the inlet gas contains dust or other foreign solid particles:

- Install a suitable filter (5 micron or less) at the inlet of the machine.

Connection size(s):

– G ¾"

Depending on the specific configuration ordered, other connection dimensions may apply.

- Make sure that the connecting lines cause no stress on the connections of the machine. Therefore, we recommend installing flexible lines at the inlet connection (IN).

5.2.2 Exhaust

CAUTION

The exhaust gas contains small amounts of oil.

Risk to health!

If air is released into rooms occupied by people:

- Make sure that adequate ventilation is provided.

NOTICE

The exhaust gas flow is obstructed.

Risk of damage to the machine!

- Make sure that the exhaust gas will flow without obstruction. Do not shut off or throttle the exhaust line or use it as a pressurized air source.

Connection size(s):

– Without connection: The exhaust gas is released to the ambient air of the machine.

5.3 Filling Oil

NOTICE

Use of inappropriate oil.

Risk of premature failure!

Loss of efficiency!

- Use only a type of oil previously approved and recommended by the manufacturer.

- For information on oil type and filling capacities, see the *Technical Data* [➔ 28] and *Oil* [➔ 29] chapters.

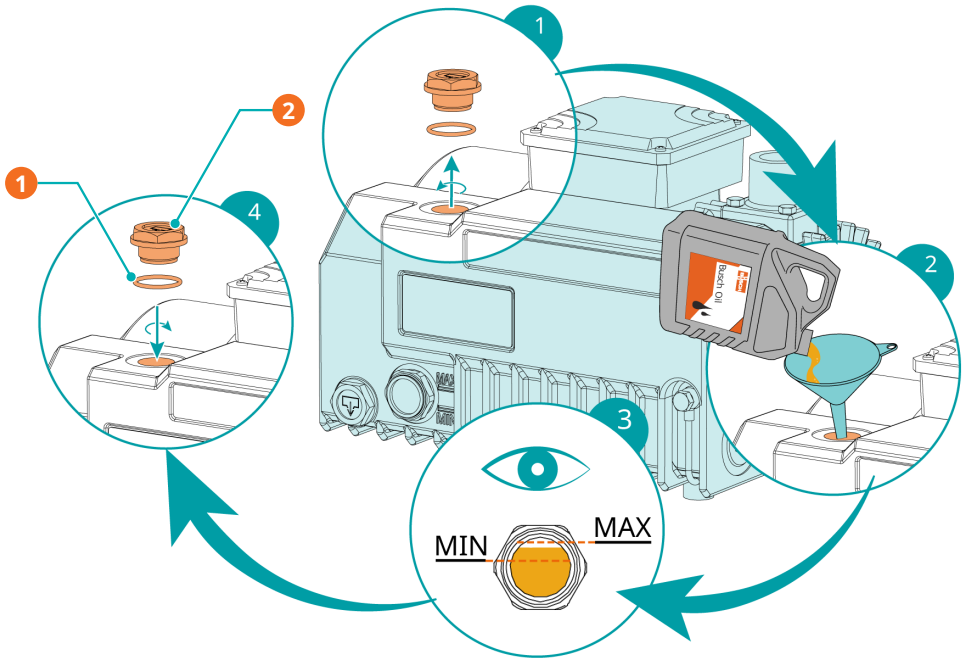

Description			
1	1 x O-ring, part number: 0486 000 590	2	Tightening torque: 12 Nm

6 Electrical Connection



DANGER

Live wires.

Risk of electrical shock!

- Electrical installation work must only be executed by qualified personnel.

INSTALLATION(S) CURRENT PROTECTION:



DANGER

Missing current protection.

Risk of electrical shock!

- Provide current protection in accordance with EN 60204-1 on your installation(s).
- The electrical installation must comply with the applicable national and international standards.

NOTICE

Electromagnetic compatibility.

- Make sure that the motor of the machine will not be affected by electric or electromagnetic disturbance from the mains. If necessary, contact your Busch representative for more information.
- Make sure that the EMC of the machine is compliant with the requirements of your supply network system, if necessary, provide further interference suppression (EMC of the machine, see *EU Declaration of Conformity* [➔ 30] or *UK Declaration of Conformity* [➔ 31]).

6.1 Machine delivered without Control Box or Variable Speed Drive (VSD)



DANGER

Live wires.

Risk of electrical shock!

- Electrical installation work must only be executed by qualified personnel.

- Make sure that the power supply for the motor is compatible with the data on the name plate of the motor.
- If the machine is equipped with a power connector, install a residual current protective device to protect persons in case of a defective insulation.
  - Busch recommends installing a type B residual protective device suitable for the electrical installation.
- Provide a lockable disconnect switch or an emergency stop switch on the power line so that the machine is completely secured in case of an emergency situation.

- Provide a lockable disconnect switch on the power line so that the machine is completely secured during maintenance tasks.
- Provide an overload protection according to EN 60204-1 for the motor.
  - Busch recommends installing a D-curve circuit breaker.
- Connect the protective earth conductor.
- Electrically connect the motor.

NOTICE

Incorrect connection.

Risk of damage to the motor!

- The wiring diagrams below are examples only. See inside the terminal box for motor connection instructions and diagrams.

6.2 Wiring Diagram Single-Phase Motor

NOTICE

Machines with single-phase motors equipped with a starting capacitor.

Higher noise level during the start-up phase and possible additional mechanical and electrical vibrations, due to starting current and torque increased by the starting capacitor.

Motor with cable outlet:

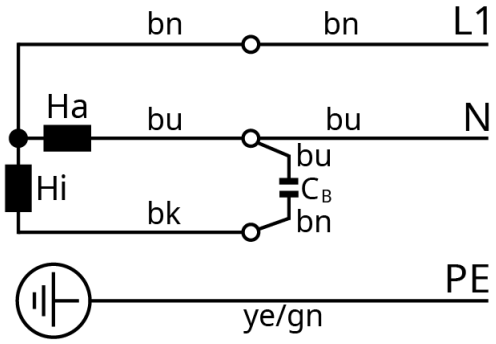

Motor with terminal box:

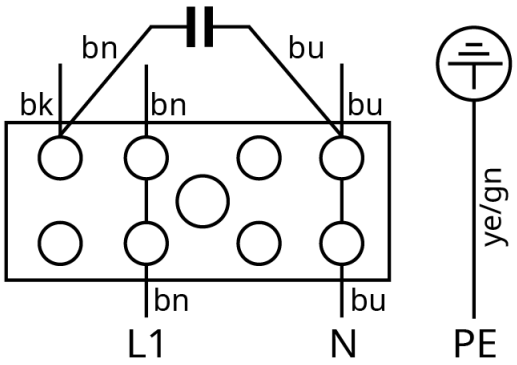

Ha = Main phase

Hi = Auxiliary phase

C_B = Permanent capacitor

bk = Black

bn = Brown

bu = Blue

ye/gn =Yellow/green

6.3 Wiring Diagram Three-Phase Motor

NOTICE

Incorrect rotation direction.

Risk of damage to the machine!

- Operating the machine in the wrong direction of rotation can destroy it very quickly! Before starting, make sure that the motor of the machine is rotating in the correct direction.

- Determine the intended direction of rotation with the arrow (stuck on or cast).
- Jog the motor briefly.

If the rotation of the motor must be changed:

- Switch any two of the motor phase wires.

Delta connection (low voltage):

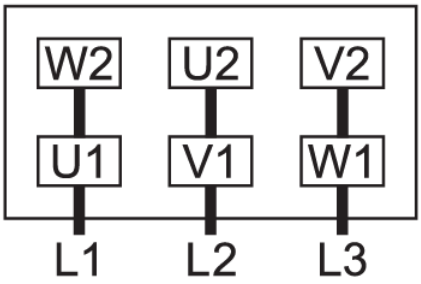

Star connection (high voltage):

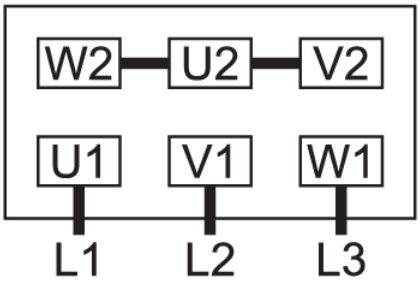

7 Commissioning



CAUTION

In operation, the surface of the machine may reach temperatures over 70°C.

Risk of burns!

- Avoid contact with the machine during and directly after operation.

CAUTION



Noise of running machine.

Risk of damage to hearing!

If people are present in the vicinity of a machine that is not insulated from noise for extended periods of time:

- Make sure to wear hearing protection.

NOTICE

The machine is normally shipped without oil.

Operation without oil will ruin the machine in short time!

- Before commissioning, the machine must be filled with oil, see *Filling Oil* [➔ 11].

- Make sure that the *Installation Conditions* [➔ 9] are met.
- Start the machine.
- Make sure that the maximum permissible number of starts does not exceed 30 starts per hour. Those starts should be spread within the hour.
- Make sure that the operating conditions comply with the *Technical Data* [➔ 28].
- After a few minutes of operation, check the oil level and top up if necessary.

As soon as the machine is used under normal operating conditions:

- Measure the motor current and record it as reference for future maintenance and troubleshooting work.

7.1 Conveying Condensable Vapors



CAUTION

Venting the machine.

The discharged gases and/or liquids may reach temperatures above 70°C!

Risk of burns!

- Avoid direct contact with the flow of gases and/or liquids.

Water vapor within the gas flow is tolerated within certain limits. The conveyance of other vapors shall be agreed upon with the manufacturer.

If condensable vapors are to be conveyed:

START

- Close the isolation valve* and open the gas-ballast valve** (GB)
- Warm up the machine for 30 minutes
- Open the isolation valve* and perform the process
- Close the isolation valve*
- Wait 30 minutes
- Close the gas-ballast valve** (GB)

END

* Not included in the scope of delivery.

** When the machine is equipped with a gas-ballast valve

8 Maintenance



DANGER

Live wires.

Risk of electrical shock!

- Electrical installation work must only be executed by qualified personnel.





WARNING



The machine is contaminated with hazardous material.

Risk of poisoning!

Risk of infection!

If the machine is contaminated with hazardous material:

- Wear appropriate personal protective equipment.



CAUTION

Hot surface.

Risk of burns!

- Before doing anything that requires touching the machine, let it cool down first.



CAUTION

Hot liquids.

Risk of burns!

- Before draining liquids, let the machine cool down first.

CAUTION

Failing to properly maintain the machine.

Risk of injuries!

Risk of premature failure and loss of efficiency!

- Maintenance work must only be executed by qualified personnel.
- Respect the maintenance intervals or ask your Busch representative for service.

NOTICE

Using inappropriate cleaners.

Risk of removing safety stickers and protective paint!

- Do not use incompatible solvents to clean the machine.

- Stop the machine and lock it to prevent accidental start-up.
- Vent the connected lines to atmospheric pressure.

If necessary:

- Disconnect all connections.

8.1 Maintenance Schedule

The maintenance intervals depend very much on the individual operating conditions. The intervals given below are considered as starting values which should be individually shortened or extended as appropriate.

Particularly harsh applications or heavy-duty operation, such as high dust loads in the environment or in the process gas, other contamination or ingress of process material, can make it necessary to shorten the maintenance intervals significantly.

Interval	Maintenance work
Weekly	• Check the oil level, see *Oil Level Inspection* [➔ 19]. • Check the machine for oil leaks. In case of leaks have the machine repaired (contact Busch).
Monthly	If the machine is equipped with an inlet filter: • Check the inlet filter cartridge, replace if necessary.
Every 2000 hours or every 6 months	• Change the oil and the exhaust filters (EF).
Every 6 months	• Clean the machine from dust and dirt. In case of a gas-ballast valve (GB) being installed: • Clean the filter of the gas-ballast valve.
Every 5 years	• Have a major overhaul on the machine (contact the manufacturer).

8.2 Oil Level Inspection

- Stop the machine.
- Wait 1 minute.
- Check the oil level.

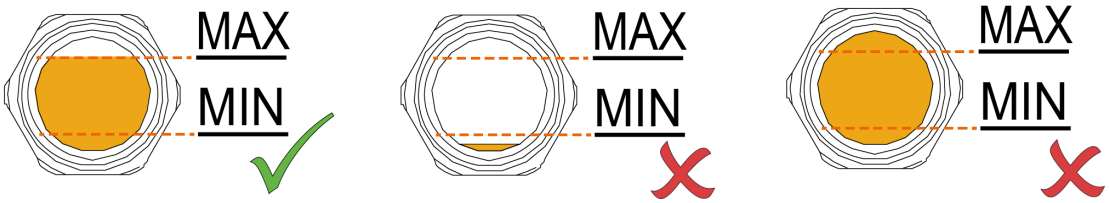

- Fill up if necessary, see *Filling Oil* [➔ 11].

8.3 Oil Change

NOTICE

Use of inappropriate oil.

Risk of premature failure!

Loss of efficiency!

- Use only a type of oil previously approved and recommended by the manufacturer.

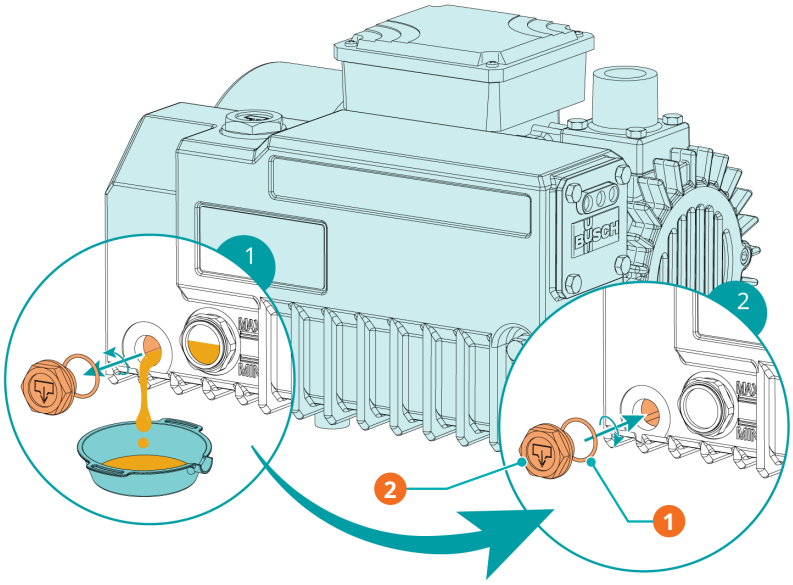

Description			
1	1 x O-ring, part number: 0486 000 505	2	Tightening torque: 12 Nm

- For information on oil type and filling capacities, see the *Technical Data* [➔ 28] and *Oil* [➔ 29] chapters.

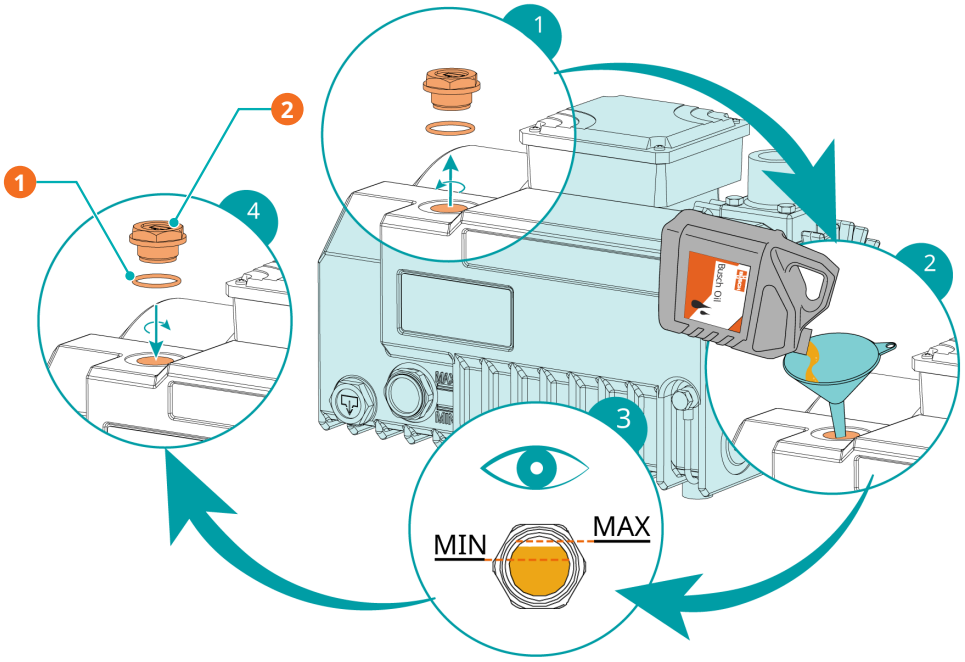

Description			
1	1 x O-ring, part number: 0486 000 590	2	Tightening torque: 12 Nm

8.4 Exhaust Filter Change

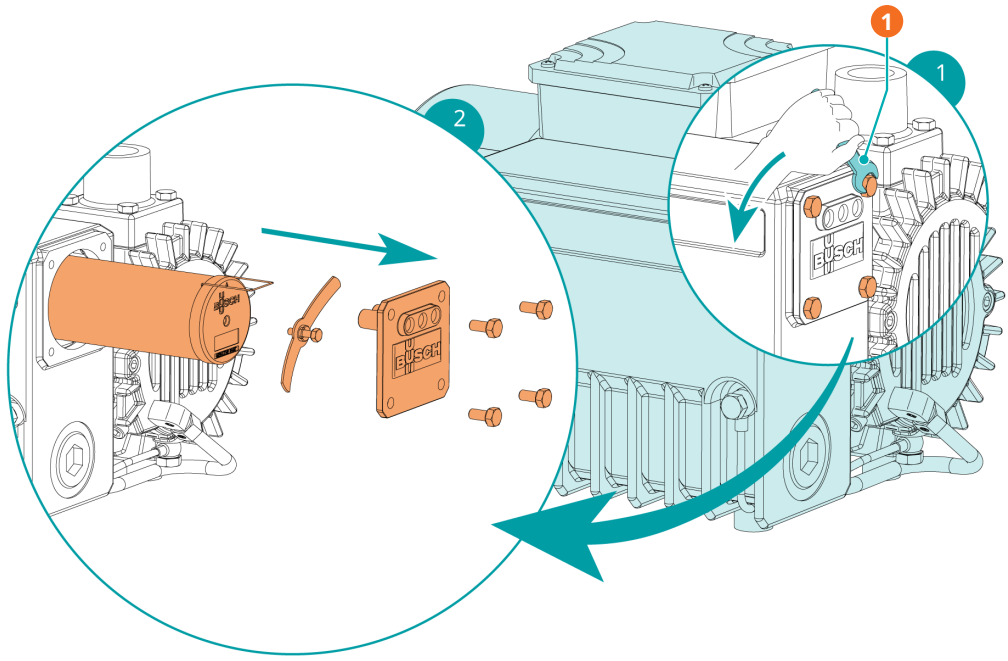

Description			
1	10 mm wrench		

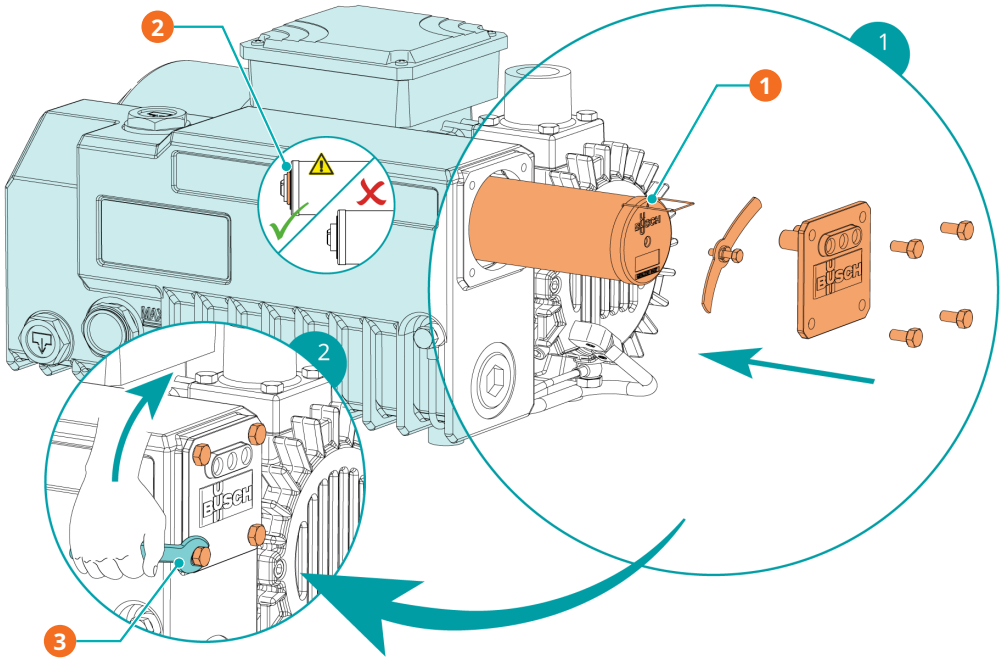

Description			
1	Busch genuine spare parts: 1 x Exhaust filter (EF), part number: 0532 140 154	2	O-ring: included with Exhaust filter (EF)
3	10 mm wrench, tightening torque: 8 Nm		

9 Overhaul





WARNING



The machine is contaminated with hazardous material.

Risk of poisoning!

Risk of infection!

If the machine is contaminated with hazardous material:

- Wear appropriate personal protective equipment.

NOTICE

Incorrect assembly.

Risk of premature failure!

Loss of efficiency!

- Any disassembly of the machine beyond that described in this manual must be carried out by technicians approved by Busch.

If the machine has conveyed gas contaminated with foreign materials which are hazardous to health:

- Decontaminate the machine as much as possible and state the contamination status in a ‘Declaration of Contamination’.

The manufacturer will only accept machine accompanied by a signed, fully completed and legally binding "declaration of contamination", downloadable from the following link: *buschvacuum.com/declaration-of-contamination*.

10 Decommissioning



DANGER

Live wires.

Risk of electrical shock!

- Electrical installation work must only be executed by qualified personnel.



CAUTION

Hot surface.

Risk of burns!

- Before doing anything that requires touching the machine, let it cool down first.



CAUTION

Hot liquids.

Risk of burns!

- Before draining liquids, let the machine cool down first.

- Stop the machine and lock it to prevent accidental start-up.
- Disconnect the power supply.
- Vent the connected lines to atmospheric pressure.
- Disconnect all connections.

If the machine is to be stored:

- See *Storage* [➔ 8].

10.1 Dismantling and Disposal

- Drain and collect the oil.
- Make sure that no oil drips onto the floor.
- Remove the exhaust filters.
- Separate special waste from the machine.
- Dispose of special waste in compliance with applicable regulations.
- Dispose of the machine as scrap metal.

11 Spare Parts

NOTICE

Use of non-Busch genuine spare parts.

Risk of premature failure!

Loss of efficiency!

- Use only Busch genuine spare parts, consumables and supplies to ensure correct operation of the machine and to validate the warranty.

Spare part	Description	Article number
Service kit	Includes all parts to perform maintenance work	0992 106 535

If other parts are required:

- Contact your Busch representative.

12 Troubleshooting



DANGER

Live wires.

Risk of electrical shock!

- Electrical installation work must only be executed by qualified personnel.



CAUTION

Hot surface.

Risk of burns!

- Before doing anything that requires touching the machine, let it cool down first.



CAUTION

Hot liquids.

Risk of burns!

- Before draining liquids, let the machine cool down first.

Illustration showing parts that may be involved during troubleshooting:

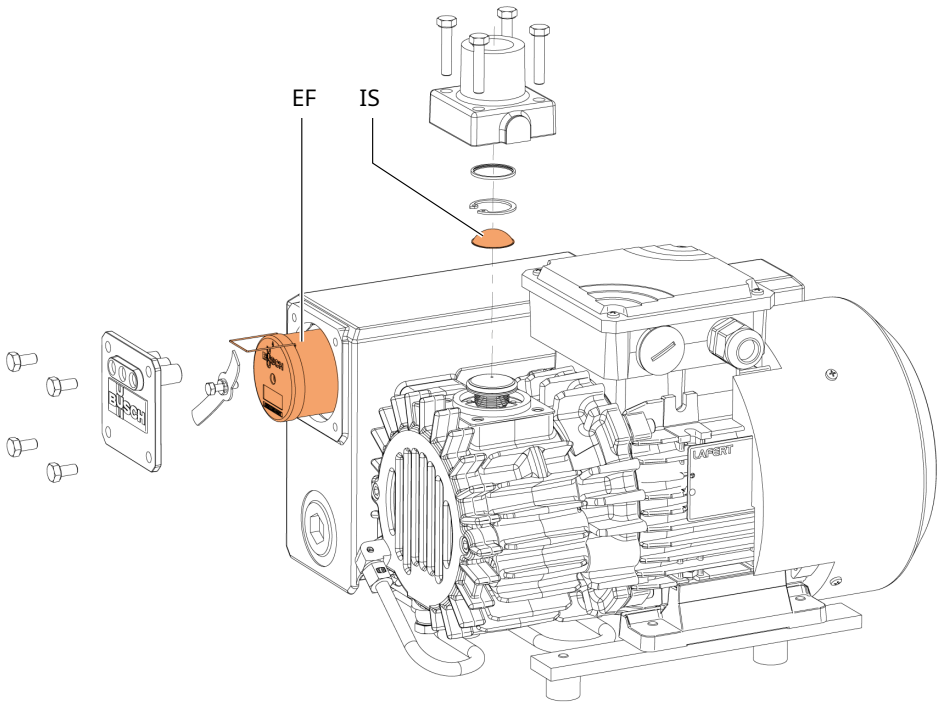

Description			
EF	Exhaust filter	IS	Inlet screen

Problem	Possible Cause	Remedy
The machine does not start.	The motor is not supplied with the correct voltage.	• Check the power supply.
	The motor is defective.	• Repair the machine (contact Busch).
The machine does not reach the usual pressure at the inlet connection.	The oil level is too low.	• Top up oil, see *Filling Oil* [➔ 11].
	The inlet screen (IS) is partially clogged.	• Clean the inlet screen (IS).
	The inlet filter cartridge (optional) is partially clogged.	• Replace the inlet filter cartridge.
	Internal parts are worn or damaged.	• Repair the machine (contact Busch).
The machine runs very noisily.	Stuck vanes.	• Repair the machine (contact Busch).
	Defective bearings.	• Repair the machine (contact Busch).
The machine runs too hot.	Insufficient cooling.	• Remove dust and dirt from the machine. • Check the cooling fan.
	Ambient temperature too high.	• Observe the permitted ambient temperature.
	Oil level too low.	• Top up oil.
	The exhaust filters (EF) are partially clogged.	• Replace the exhaust filters (EF).
The machine fumes or expels oil droplets through the exhaust gases.	The exhaust filters (EF) are partially clogged.	• Replace the exhaust filters (EF).
	An exhaust filter (EF) with O-ring is not fitted properly.	• Ensure the correct position of the exhaust filters (EF) and the O-rings.
The oil is black.	Oil change intervals are too long.	• Flush the machine (contact Busch).
	The inlet filter (optional) is defective.	• Replace the inlet filter.
	The machine runs too hot.	• See problem "The machine runs too hot".
The oil is emulsified.	The machine sucked in liquids or significant amounts of vapor.	• Flush the machine (contact Busch).

For resolution of problems not listed in the troubleshooting table, contact your Busch representative.

13 Technical Data

		KB 0025 F	KC 0025 F
Nominal pumping speed (50 / 60 Hz)	m^3/h	25 / 30	
	ACFM	– / 17.6	
Ultimate pressure	hPa (mbar) abs.	2.0	20
	Torr	1.5	15
Nominal motor speed (50 / 60 Hz)	min^{-1}	3000 / 3600	
	rpm		
Nominal motor rating (50 / 60 Hz)	kW	0.9 / 1.1	
	hp	– / 1.5	
Sound pressure level (ISO 2151), KpA = 3 dB (50 / 60 Hz)	dB(A)	68 / 69	
Ambient temperature	°C	5... 40 *	
	°F	41 ... 104 *	
Inlet gas temperature	°C	5... 40 *	
	°F	41 ... 104 *	
Ambient pressure		Atmospheric pressure	
Oil capacity	l	0.45	
	qts.	0.45	
Weight approx. (standard configuration)	kg	20 **	
	Lbs.	44 **	

* In case of higher or lower temperatures, consult your Busch representative.

** The weight can vary depending on the order.

14 Oil



NOTE

Oil viscosity based on motor wiring (single-phase or three-phase).

- For single-phase motors, use oil with a viscosity of 032.
- For three-phase motors, use oil with a viscosity of 068.

Name	ISO-VG	Oil type	0.1 L packing	0.5 L packing	1 L packing	5 L packing
VM 032	32	Mineral	-	-	0831 000 086	0831 000 087
VM 068	68	Mineral	-	-	0831 102 492	0831 102 493
VSA 032	32	Synthetic	-	-	0831 163 958	0831 163 961
VSA 068	68	Synthetic	-	-	0831 163 964	0831 163 965
VSB 032	32	Synthetic	-	-	0831 168 343	0831 168 344
VSB 068	68	Synthetic	-	-	0831 168 347	0831 168 348

In case of unfavorable ambient temperature, other oil viscosities can be used.

- For more information, contact your Busch representative.

To find out which oil needs to be filled into the machine, refer to the name plate (NP).

Oil suitability

- **Oil VM 032**: Standard oil for operating temperatures <70°C.
- **Oil VM 068**: Standard oil for operating temperatures <80°C.
  - This should be used only in combination with three-phase motors.
- **Oil VSA 032**: Suitable for food applications (H1)
  - With additives against corrosion
  - Light cycle operation (long downtime)
  - Operating oil temperature <100°C
  - Compliant with kosher and halal standards.
- **Oil VSA 068**: Suitable for food applications (H1)
  - With additives against corrosion
  - Light cycle operation (long downtime)
  - Operating oil temperature <100°C
  - Compliant with kosher and halal standards.
- **Oil VSB 032**: Suitable for food applications (H1)
  - Compliant with kosher and halal standards.
  - Operating oil temperature <130°C
- **Oil VSB 068**: Suitable for food applications (H1)
  - This should be used only in combination with three-phase motors.
  - Compliant with kosher and halal standards.
  - Operating oil temperature <130°C

15 EU Declaration of Conformity

This Declaration of Conformity and the CE-markings affixed to the name plate are valid for the machine within the Busch scope of delivery. This Declaration of Conformity is issued under the sole responsibility of the manufacturer.

When this machine is integrated into a superordinate machinery, the manufacturer of the superordinate machinery (this can be the operating company, too) must conduct the conformity assessment process for the superordinate machine or plant, issue the Declaration of Conformity for it and affix the CE-marking.

The manufacturer

Busch Výroba CZ s.r.o.
Svárovská 620
CZ 460 01, Liberec 11

declares that the machine: vacuum pump R5 KB 0025 F; R5 KC 0025 F

fulfill(s) all the relevant provisions from EU directives or regulations:

- 'Machinery Directive' 2006/42/EC, if the serial number is less than or equal to CZM127029999 (until January 19, 2027).
- 'Machinery Regulation' (EU) 2023/1230, if the serial number is greater than or equal to CZM127030000 (from January 20, 2027). The conformity assessment has been carried out according to internal production control procedure (Module A), in accordance with the requirements of the 'Machinery Regulation'.
- 'Electromagnetic Compatibility' (EMC) 2014/30/EU
- 'RoHS' 2011/65/EU Restriction of the use of certain hazardous substances in electrical and electronic equipment (incl. all related applicable amendments)
- 'Cyber Resilience Act' [1)], Regulation (EU) 2024/2847, if the serial number is greater than or equal to CZM127480000 (from December 11, 2027). The conformity assessment has been carried out according to internal production control procedure (Module A), in accordance with the requirements of the 'Cyber Resilience Act'.

and comply(-ies) with the following harmonized standards, common specifications or other technical specifications:

Standard	Title of the Standard
EN ISO 12100 : 2010	Safety of machinery - Basic concepts, general principles of design
EN 1012-2 : 1996 + A1 : 2009	Vacuum pumps - Safety requirements - Part 2
EN 60204-1 : 2018	Safety of machinery - Electrical equipment of machines - Part 1: General requirements
EN ISO 13857 : 2019	Safety of machinery - Safety distances to prevent hazard zones being reached by the upper and lower limbs
EN ISO 2151 : 2008	Acoustics - Noise test code for compressors and vacuum pumps - Engineering method (grade 2)
EN IEC 63000 : 2018	Technical documentation for the assessment of electrical and electronic products with respect to the restriction of hazardous substances
EN IEC 61000-6-2 : 2019	Electromagnetic compatibility (EMC) - Generic standards. Immunity for industrial environments
EN IEC 61000-6-4 : 2019	Electromagnetic compatibility (EMC) - Generic standards. Emission standard for industrial environments
EN IEC 62443-3-3 : 2019	Industrial communication networks - Network and system security - Part 3-3: System security requirements and security levels

Legal person authorized to compile the technical file and authorized representative in the EU (if the manufacturer is not located in the EU):
Busch Dienste GmbH, Schauinslandstr. 1, DE-79689 Maulburg

Liberec, 2026.10.01



Michael Dostalek, General Manager

Busch Výroba CZ s.r.o.

[1)] The **'Cyber Resilience Act'** regulation is applicable if the machine is delivered ex-factory with digital elements containing programmable or digital functions, such as a control box, a VSD (Variable Speed Drive), an OTTO IoT Box, a Busch PLC (Programmable Logic Controller) ...

16 UK Declaration of Conformity

This Declaration of Conformity and the UKCA-markings affixed to the name plate are valid for the machine within the Busch scope of delivery. This Declaration of Conformity is issued under the sole responsibility of the manufacturer.

When this machine is integrated into a superordinate machinery, the manufacturer of the superordinate machinery (this can be the operating company, too) must conduct the conformity assessment process for the superordinate machine or plant, issue the Declaration of Conformity for it and affix the UKCA-marking.

The manufacturer

Busch Výroba CZ s.r.o.
Svárovská 620
CZ 460 01, Liberec 11

declares that the machine: vacuum pump R5 KB 0025 F; R5 KC 0025 F

fulfill(s) all the relevant provisions from UK legislations:

- Supply of Machinery (Safety) Regulations 2008
- Electromagnetic Compatibility Regulations 2016
- Restriction of the use of certain hazardous substances in Electrical and Electronic Equipment Regulations 2012

and comply(-ies) with the following designated standards, common specifications or other technical specifications:

Standard	Title of the Standard
EN ISO 12100 : 2010	Safety of machinery - Basic concepts, general principles of design
EN 1012-2 : 1996 + A1 : 2009	Vacuum pumps - Safety requirements - Part 2
EN 60204-1 : 2018	Safety of machinery - Electrical equipment of machines - Part 1: General requirements
EN ISO 13857 : 2019	Safety of machinery - Safety distances to prevent hazard zones being reached by the upper and lower limbs
EN ISO 2151 : 2008	Acoustics - Noise test code for compressors and vacuum pumps - Engineering method (grade 2)
EN IEC 63000 : 2018	Technical documentation for the assessment of electrical and electronic products with respect to the restriction of hazardous substances
EN IEC 61000-6-2 : 2019	Electromagnetic compatibility (EMC) - Generic standards. Immunity for industrial environments
EN IEC 61000-6-4 : 2019	Electromagnetic compatibility (EMC) - Generic standards. Emission standard for industrial environments
EN IEC 62443-3-3 : 2019	Industrial communication networks - Network and system security - Part 3-3: System security requirements and security levels

Legal person authorized to compile the technical file and importer in the UK (if the manufacturer is not located in the UK):
Busch (UK) Ltd, 30 Hortonwood, Telford – UK

Liberec, 2026.10.01



Michael Dostalek, General Manager

Busch Výroba CZ s.r.o.

BUSCH GROUP

The Busch Group is one of the world's largest manufacturers of vacuum pumps, vacuum systems, blowers, compressors and gas abatement systems. Under its umbrella, the group houses two well-known brands: Busch Vacuum Solutions and Pfeiffer Vacuum+Fab Solutions. Together, they offer solutions to a wide range of industries. A global network of highly competent local teams in 44 countries ensures that expert, tailor-made support is always available near you. Wherever you are. Whatever your business.



- Busch Group companies
- Busch Group production sites
- Busch Group service centers
- Busch Group local representatives

www.buschvacuum.com

www.pfeiffer-vacuum.com

0870136887 | B0_en-US